s.r.l. GORLA
MORSETTERIE
MILANO

TECHNICAL OFFICE

45° CONNECTOR
FOR Al STUD
AND Cu CONDUCTOR

DRG. N. 24/AB/X

Rev.1 dated 05.09.07

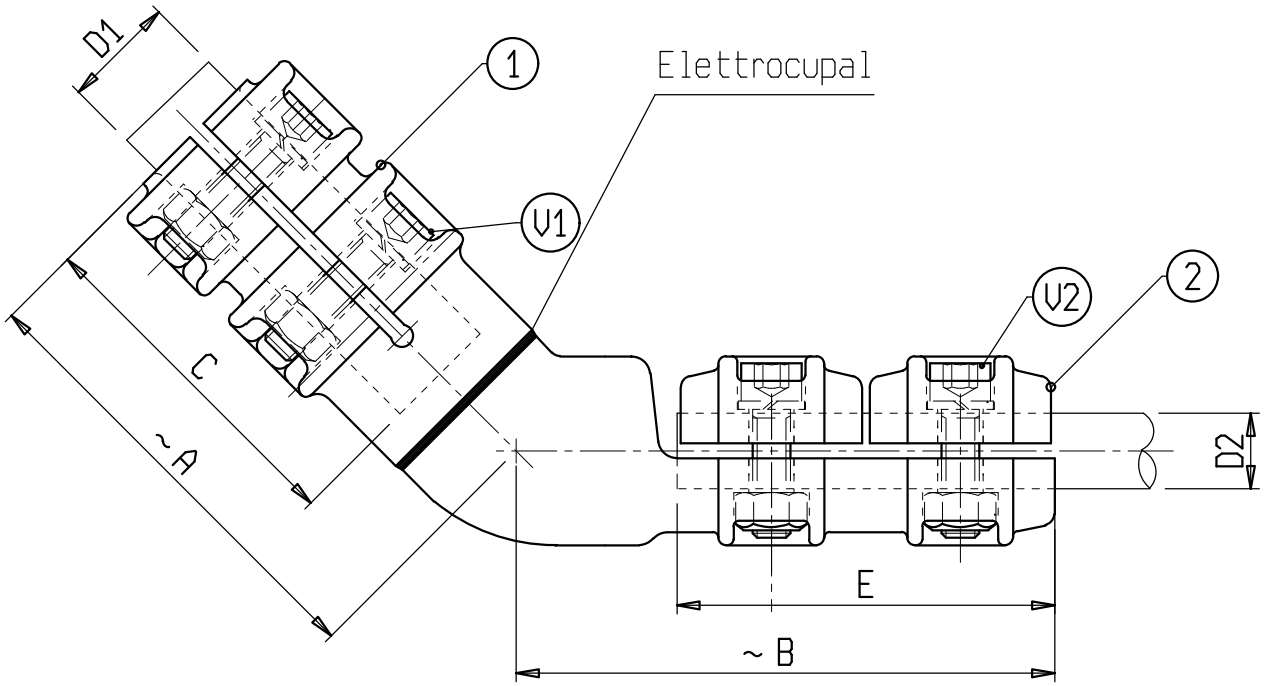

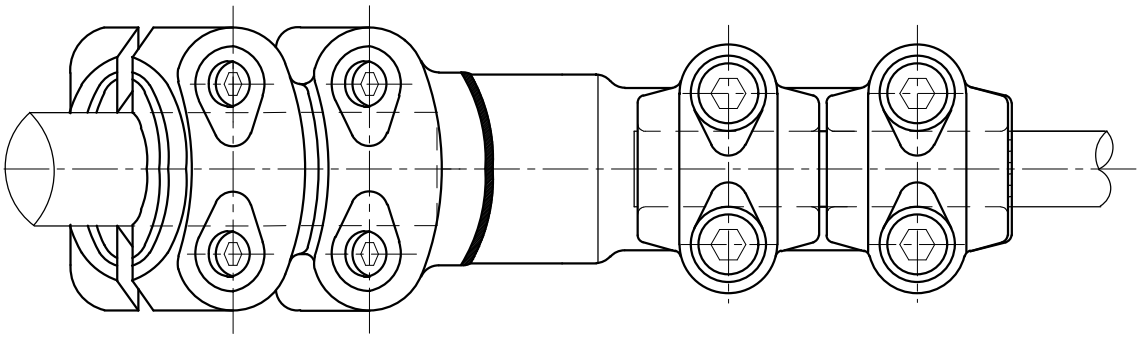

Material: 1 Aluminium alloy 2 Copper alloy

Bolts: Stainless steel

X	ø CONDUCTOR		A	B	C	E	V1	V2	X	ø CONDUCTOR		A	B	C	E	V1	V2
	D1	D2								D1	D2						
C 6465AB	20	12-20	120	135	80	100	M10	M10	C 6317AB	40	32-36	120	140	80	100	M10	M10
C 6537AB	30	12-20	120	135	80	100	M10	M10									
C 6843AB	30	20-25	120	135	80	100	M10	M10									
C 6333AB	30	32-36	120	140	80	100	M10	M10									
C 6361AB	40	12-20	120	135	80	100	M10	M10									
C 6427AB	40	20-25	120	135	80	100	M10	M10									

s.r.l. GORLA
MORSETTERIE
MILANO

TECHNICAL OFFICE

45° CONNECTOR
FOR Al STUD
AND Cu CONDUCTOR
WITH BOSS

DRG. N.24/AB1/X

Rev.1 dated 05.09.07

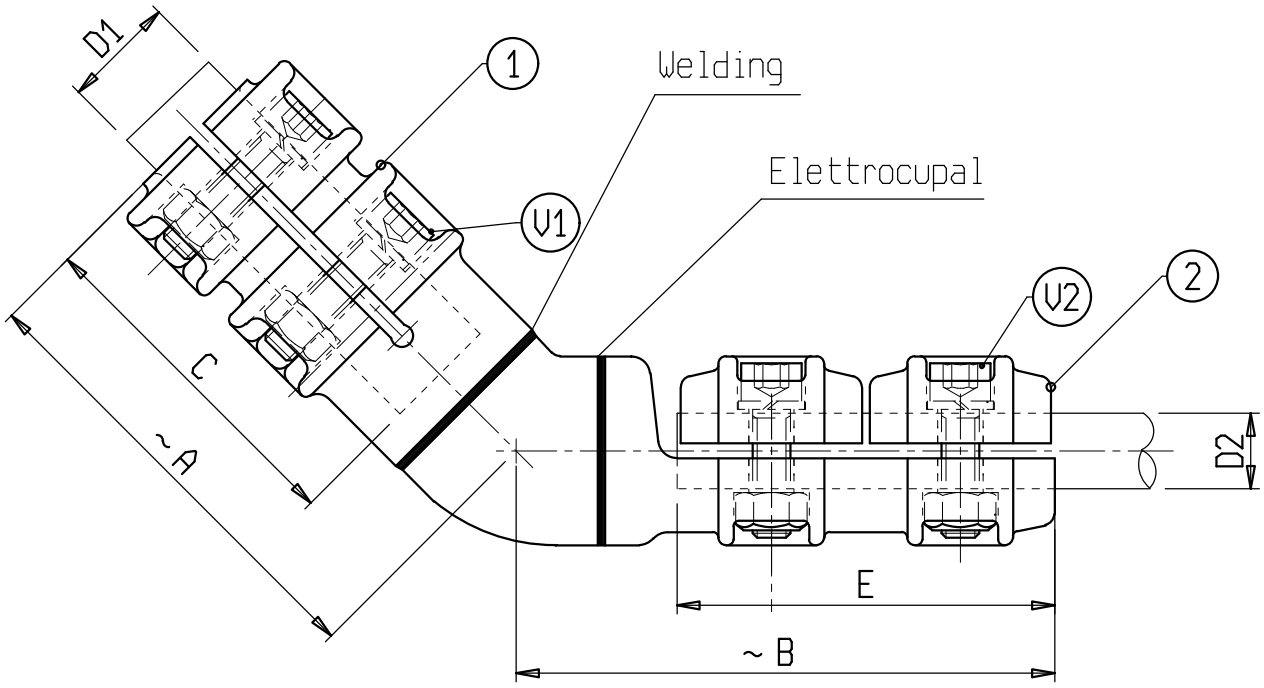

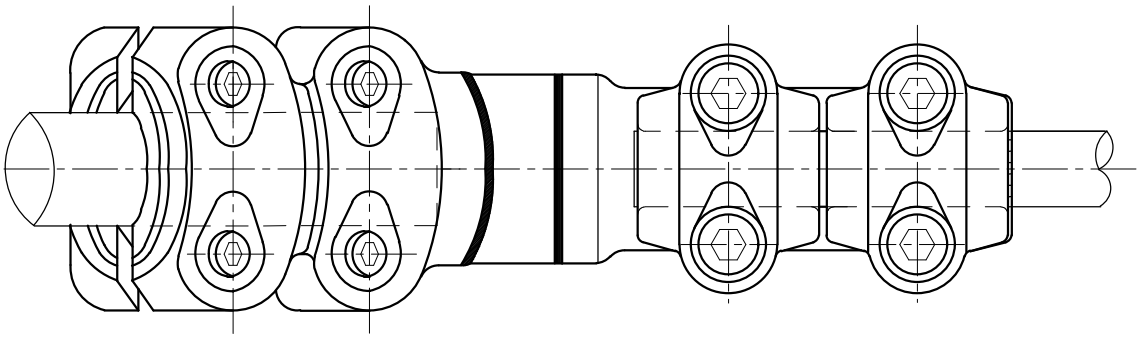

Material: 1 Aluminium alloy 2 Copper alloy
Bolts: Stainless steel

X	ø CONDUCTOR		A	B	C	E	V1	V2	X	ø CONDUCTOR		A	B	C	E	V1	V2
	D1	D2								D1	D2						
C 6658AB	30	25-32	120	135	80	100	M10	M10									
C 6519AB	40	25-32	120	135	80	100	M10	M10									
C 6859AB	40	36-40	120	150	80	100	M10	M10									

s.r.l. GORLA
MORSETTERIE
MILANO

TECHNICAL OFFICE

45° CONNECTOR
FOR Cu STUD
AND Al CONDUCTOR

DRG. N. 24/BA/X

Rev.1 dated 05.09.07

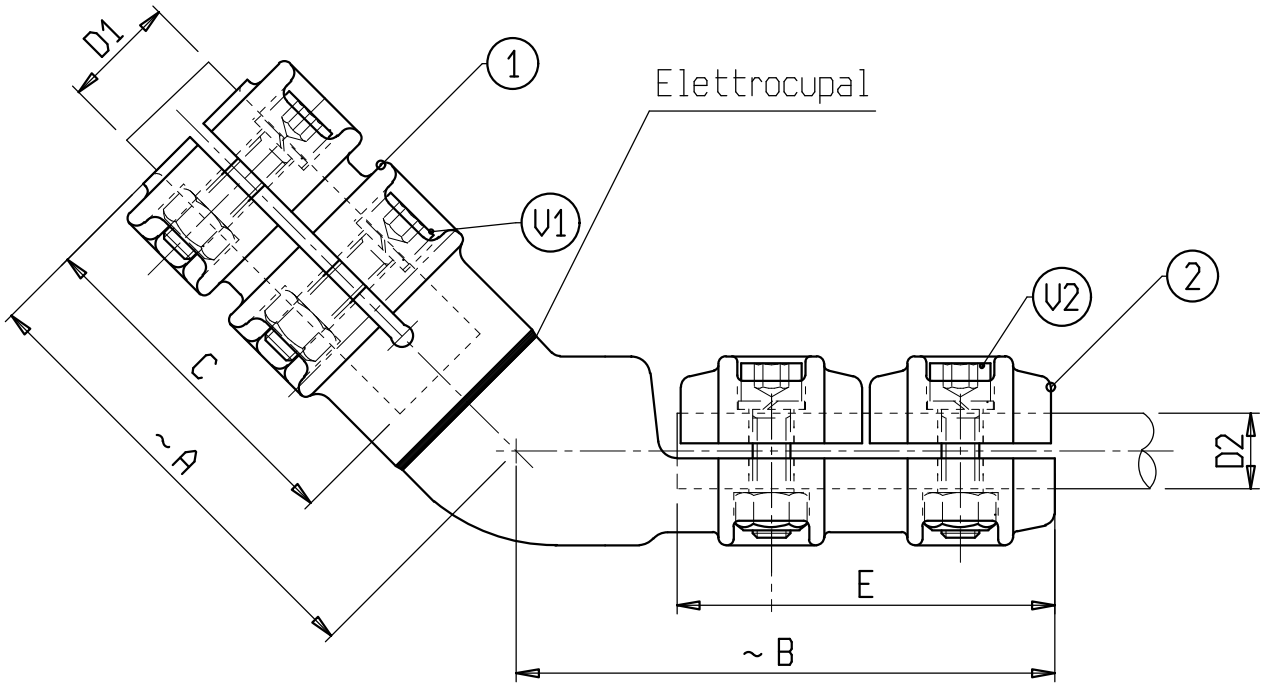

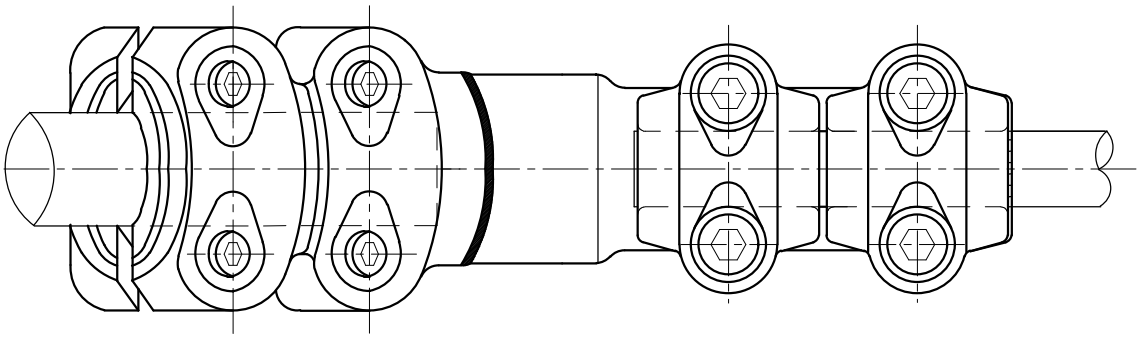

Material: 1 Copper alloy 2 Aluminium alloy

Bolts: Stainless steel

X	ø CONDUCTOR		A	B	C	E	V1	V2	X	ø CONDUCTOR		A	B	C	E	V1	V2
	D1	D2								D1	D2						
C 6465BA	20	12-20	120	135	80	100	M10	M10	C 6317BA	40	32-36	120	140	80	100	M10	M10
C 6537BA	30	12-20	120	135	80	100	M10	M10									
C 6843BA	30	20-25	120	135	80	100	M10	M10									
C 6333BA	30	32-36	120	140	80	100	M10	M10									
C 6361BA	40	12-20	120	135	80	100	M10	M10									
C 6427BA	40	20-25	120	135	80	100	M10	M10									

s.r.l. GORLA
MORSETTERIE
MILANO

TECHNICAL OFFICE

45° CONNECTOR
FOR Cu STUD
AND Al CONDUCTOR
WITH BOSS

DRG. N.24/BA1/X

Rev.1 dated 05.09.07

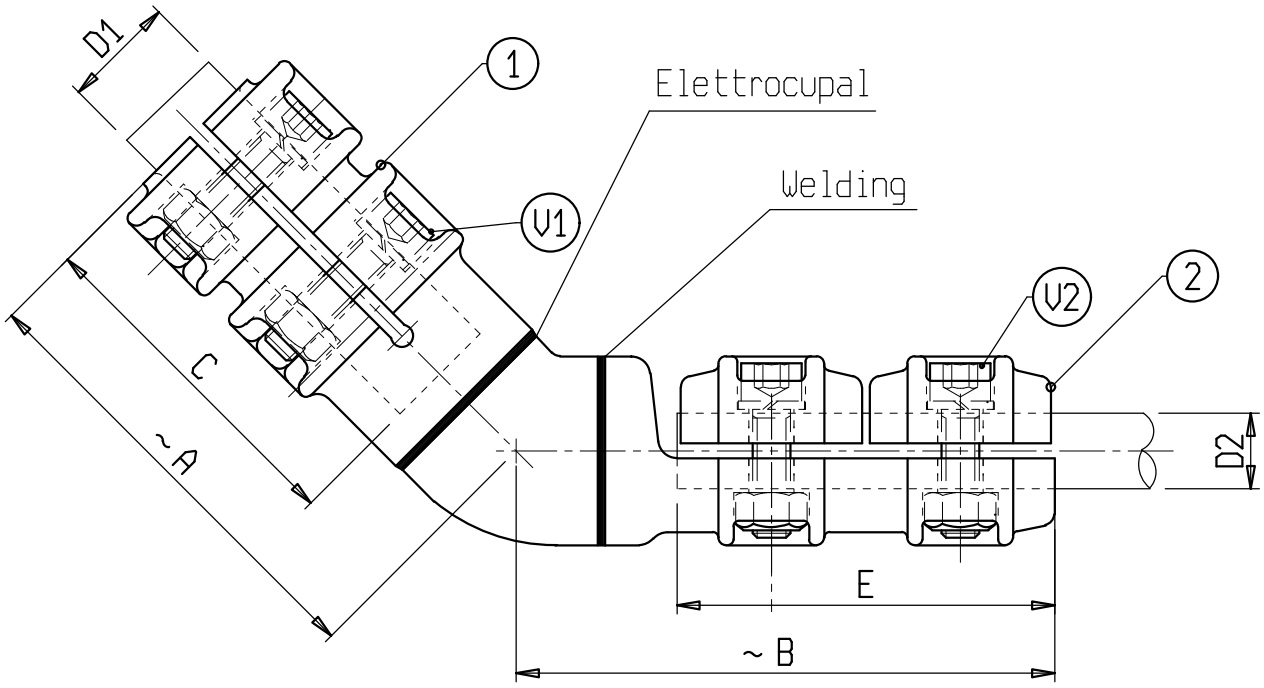

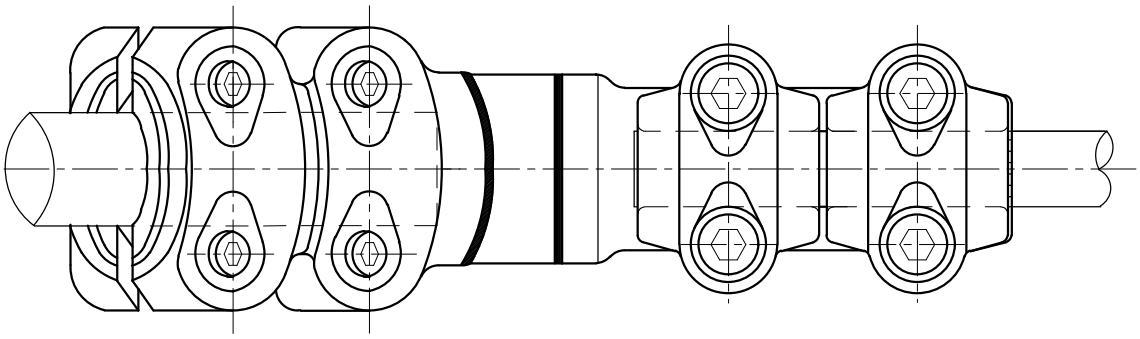

Material: 1 Copper alloy 2 Aluminium alloy
Bolts: Stainless steel

X	ø CONDUCTOR		A	B	C	E	V1	V2	X	ø CONDUCTOR		A	B	C	E	V1	V2
	D1	D2								D1	D2						
C 6658BA	30	25-32	120	135	80	100	M10	M10									
C 6519BA	40	25-32	120	135	80	100	M10	M10									
C 6859BA	40	36-40	120	150	80	100	M10	M10									

s.r.l. GORLA
MORSETTERIE
MILANO

TECHNICAL OFFICE

45° CONNECTOR
FOR Al STUD
AND Cu CONDUCTOR

DRG. N. 25/AB/X

SCALE

DRAWN	DATE
APPROVED	DATE

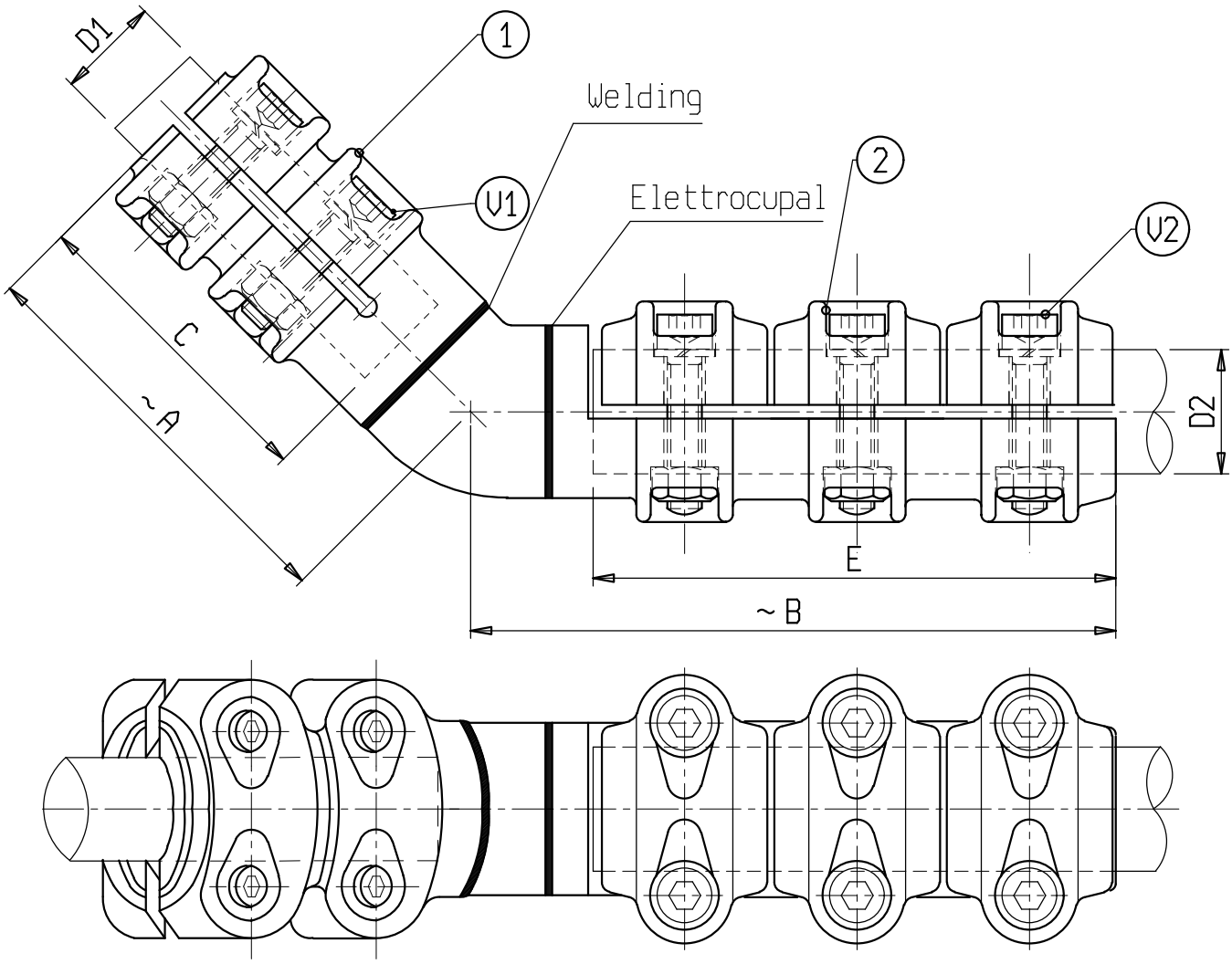

Material: 1 Aluminium alloy 2 Copper alloy

Bolts: Stainless steel

X	ø CONDUCTOR		A	B	C	E	V1	V2	X	ø CONDUCTOR		A	B	C	E	V1	V2
	D1	D2								D1	D2						
C 6723AB	30	20-25	120	185	80	150	M10	M10	C 0144AB	40	32-36	120	185	80	150	M10	M10
C 6763AB	30	25-32	120	185	80	150	M10	M10									

s.r.l. GORLA MORSETTERIE MILANO TECHNICAL OFFICE	45° CONNECTOR FOR Cu STUD AND Al CONDUCTOR	DRG. N. 25/BA/X SCALE DRAWN / DATE APPROVED / DATE

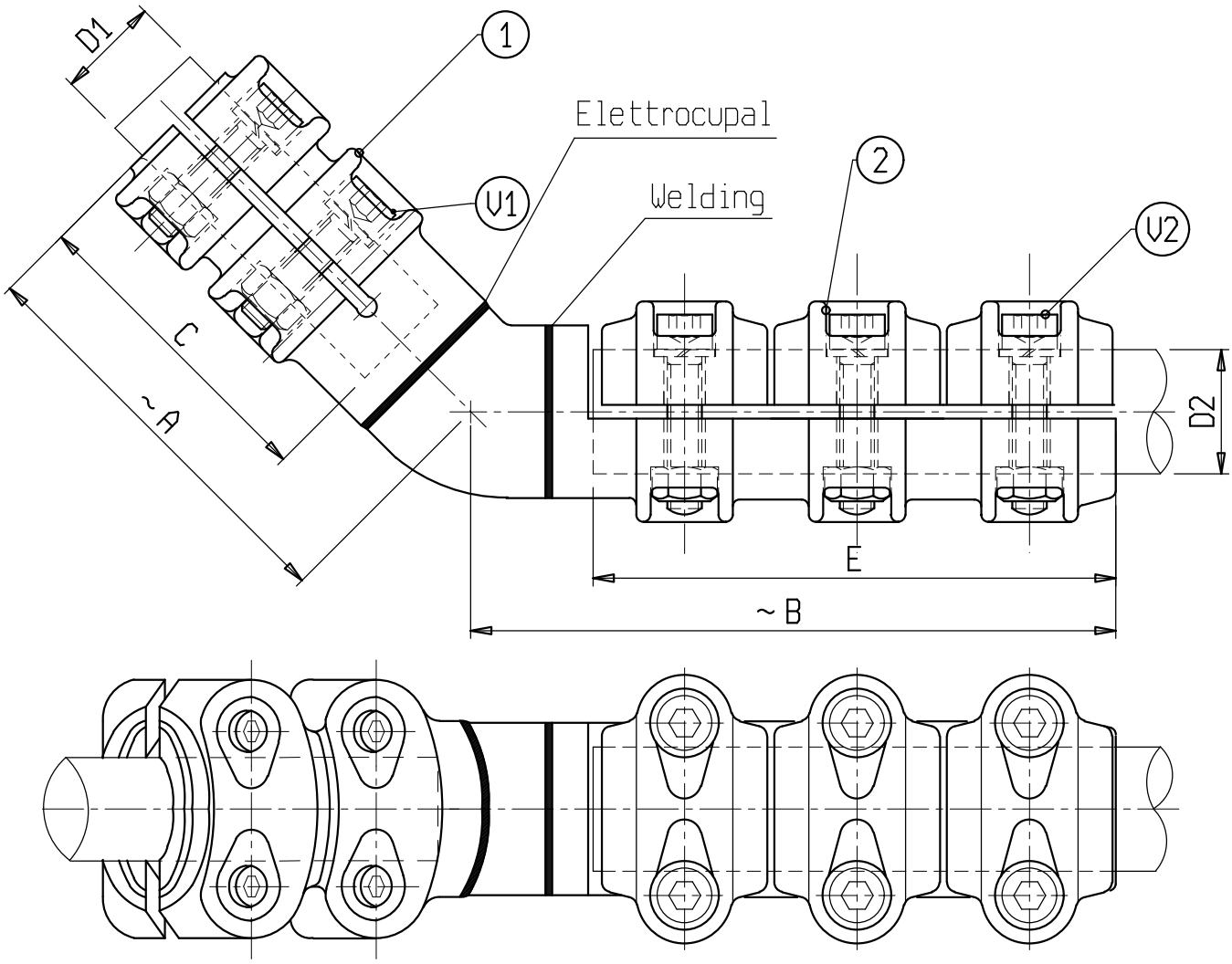

Material: 1 Copper alloy 2 Aluminium alloy

Bolts: Stainless steel

X	ø CONDUCTOR		A	B	C	E	V1	V2	X	ø CONDUCTOR		A	B	C	E	V1	V2
	D1	D2								D1	D2						
C 6723BA	30	20-25	120	185	80	150	M10	M10	C 0144BA	40	32-36	120	185	80	150	M10	M10
C 6763BA	30	25-31,5	120	185	80	150	M10	M10									