s.r.l. GORLA
MORSETTERIE
MILANO

TECHNICAL OFFICE

45° CONNECTOR
PER Al STUD
AND Al CONDUCTOR

DRG. N. 24/AA/X

Rev.1 dated 05.09.07

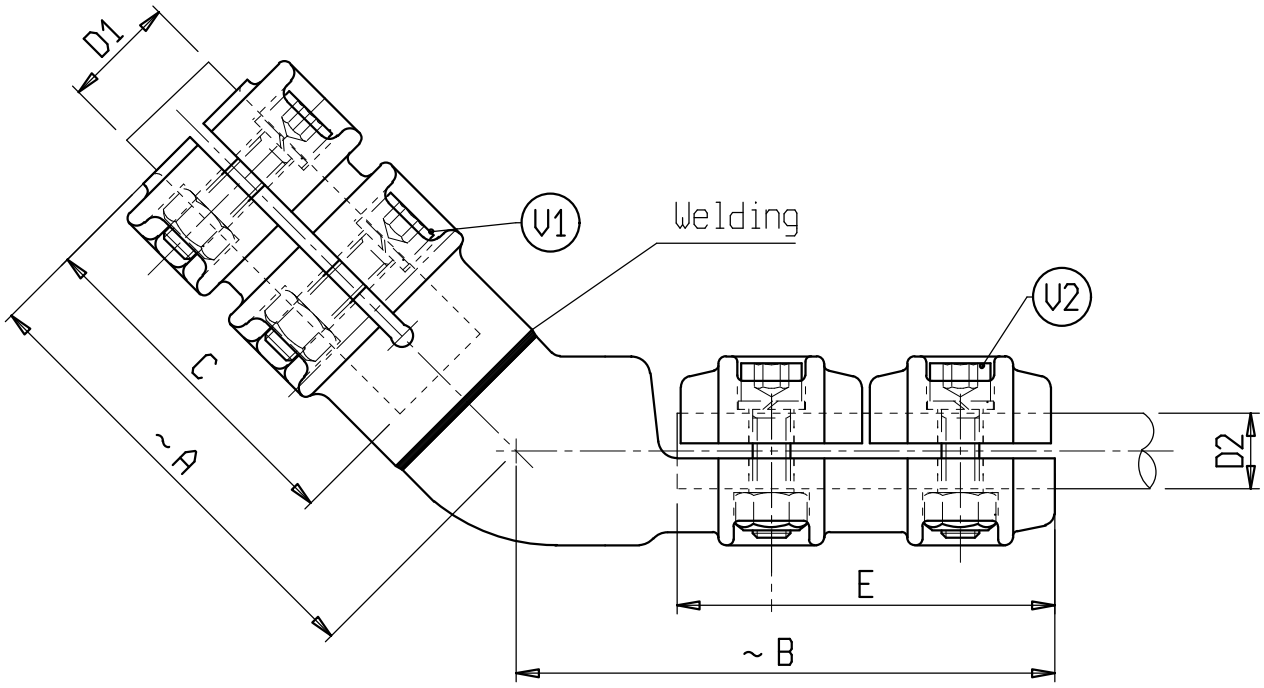

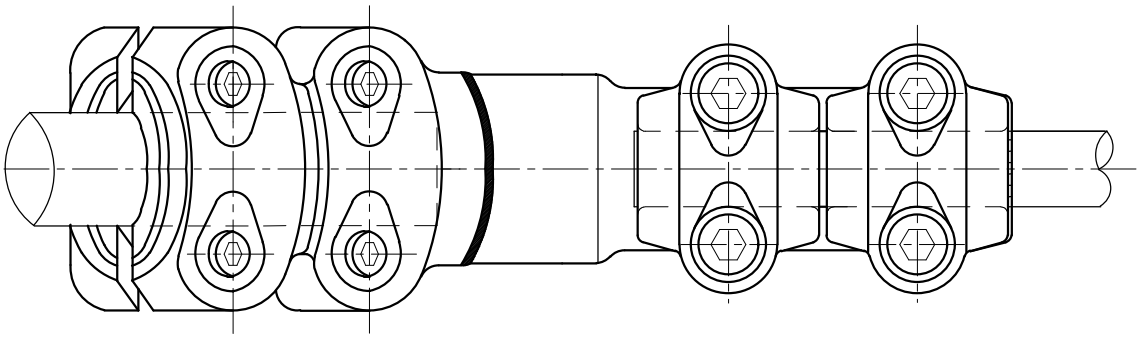

Material: Aluminium alloy
Bolts: Stainless steel

X	ø CONDUCTOR		A	B	C	E	V1	V2	X	ø CONDUCTOR		A	B	C	E	V1	V2
	D1	D2								D1	D2						
C 6465AA	20	12-20	120	135	80	100	M10	M10	C 6317AA	40	32-36	120	140	80	100	M10	M10
C 6537AA	30	12-20	120	135	80	100	M10	M10									
C 6843AA	30	20-25	120	135	80	100	M10	M10									
C 6333AA	30	32-36	120	140	80	100	M10	M10									
C 6361AA	40	12-20	120	135	80	100	M10	M10									
C 6427AA	40	20-25	120	135	80	100	M10	M10									

s.r.l. GORLA
MORSETTERIE
MILANO

TECHNICAL OFFICE

45° CONNECTOR
PER Al STUD
AND Al CONDUCTOR
WITH BOSS

DRG. N.24/AA1/X

Rev.1 dated 05.09.07

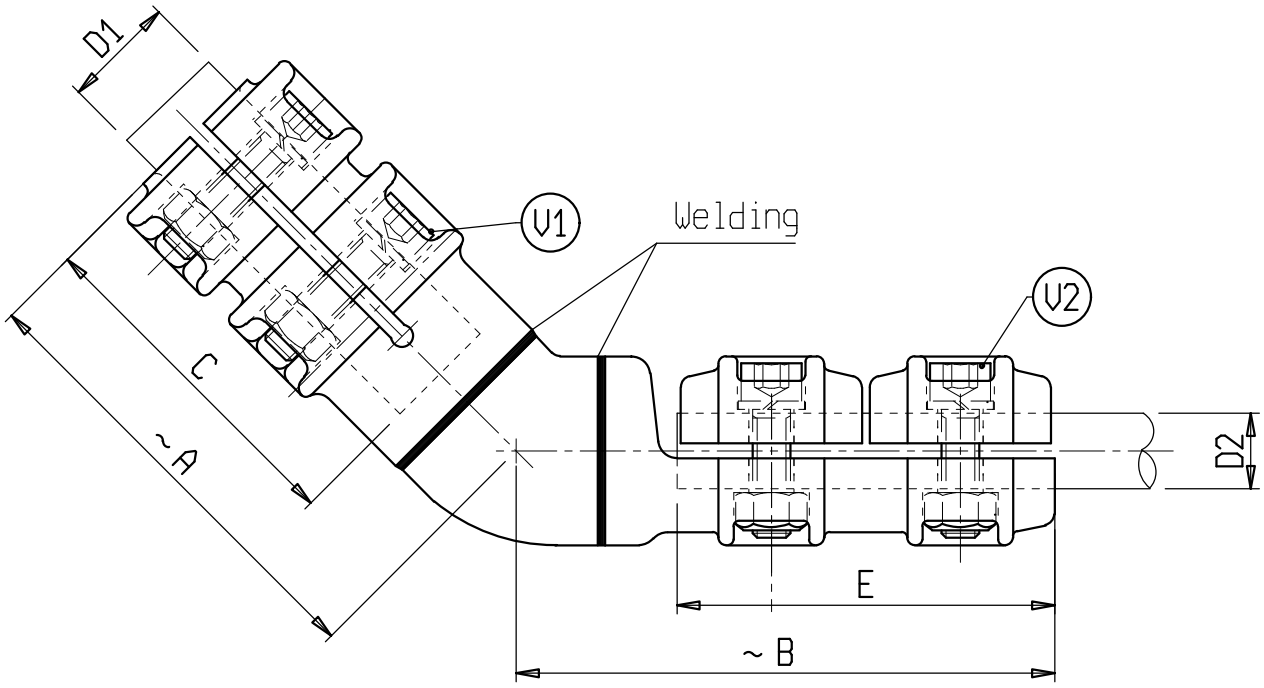

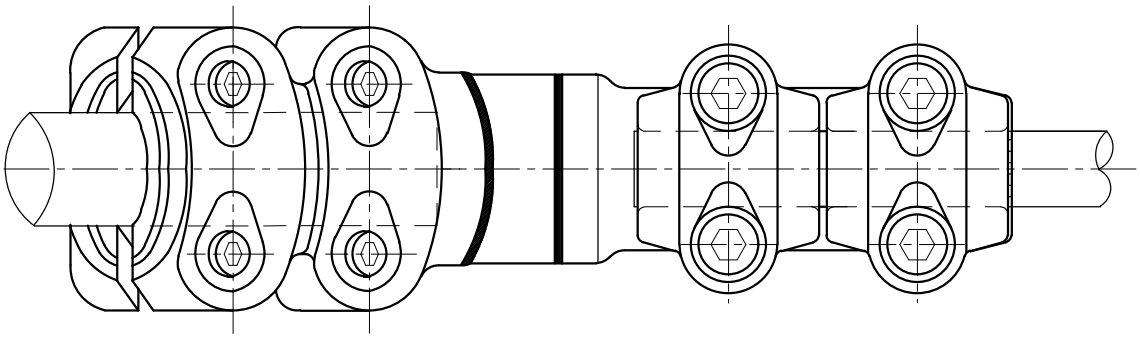

Material: Aluminium alloy
Bolts: Stainless steel

X	ø CONDUCTOR		A	B	C	E	V1	V2	X	ø CONDUCTOR		A	B	C	E	V1	V2
	D1	D2								D1	D2						
C 6658AA	30	25-32	120	135	80	100	M10	M10									
C 6519AA	40	25-32	120	135	80	100	M10	M10									
C 6859AA	40	36-40	120	150	80	100	M10	M10									

s.r.l. GORLA MORSETTERIE MILANO TECHNICAL OFFICE	45° CONNECTOR PER Al STUD AND Al CONDUCTOR	DRG. N. 25/AA/X SCALE . DRAWN . / DATE . APPROVED . / DATE .

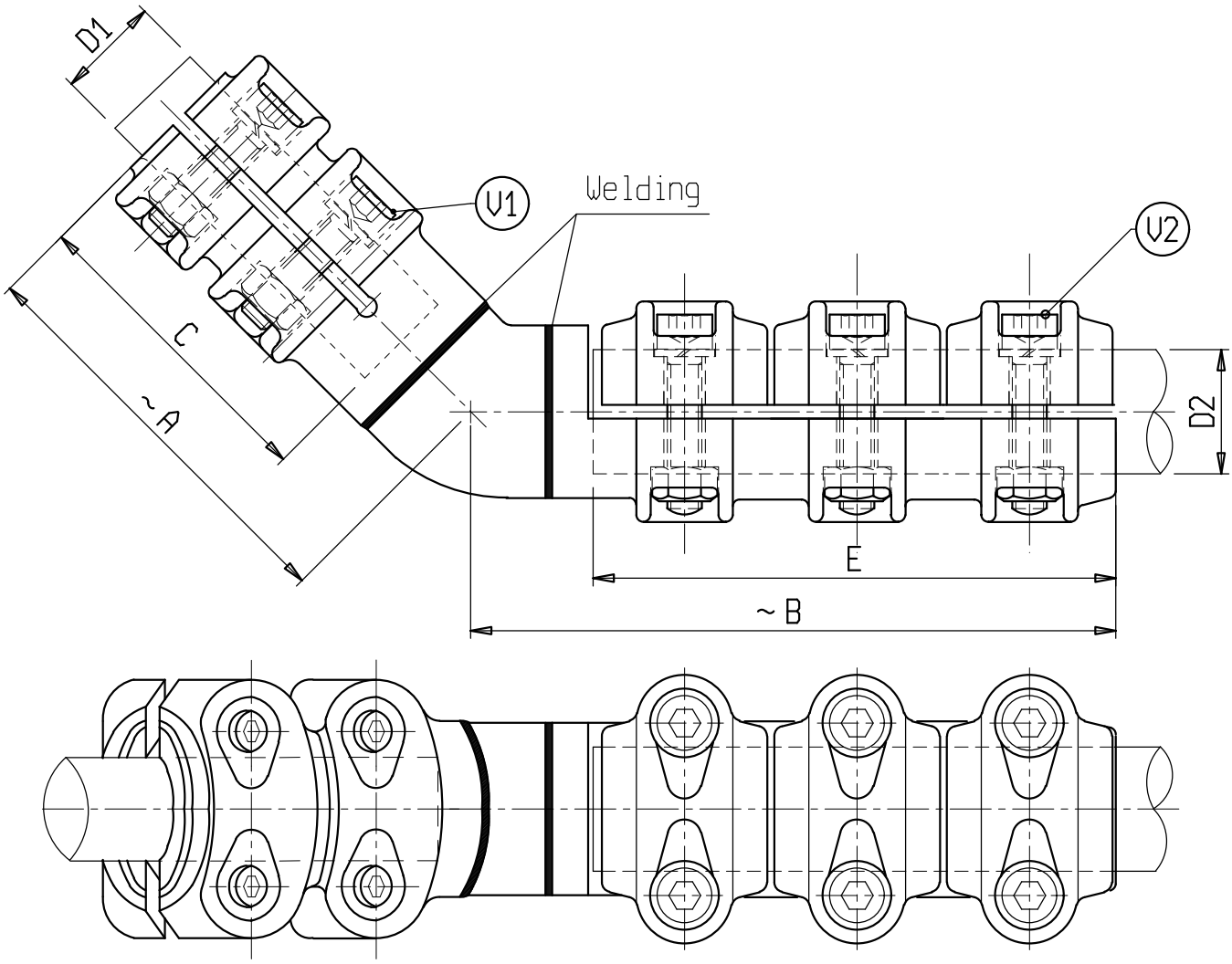

Material: Aluminium alloy

Bolts: Stainless steel

X	ø CONDUCTOR		A	B	C	E	V1	V2	X	ø CONDUCTOR		A	B	C	E	V1	V2
	D1	D2								D1	D2						
C 6723AA	30	20-25	120	185	80	150	M10	M10	C 0144AA	40	32-36	120	185	80	150	M10	M10
C 6763AA	30	25-32	120	185	80	150	M10	M10									