s.r.l. GORLA MORSETTERIE MILANO TECHNICAL OFFICE	90° CONNECTOR FOR Al STUD AND Cu FLAT	DRG. N. 23/AB/X SCALE . DRAWN . / DATE . APPROVED . / DATE .

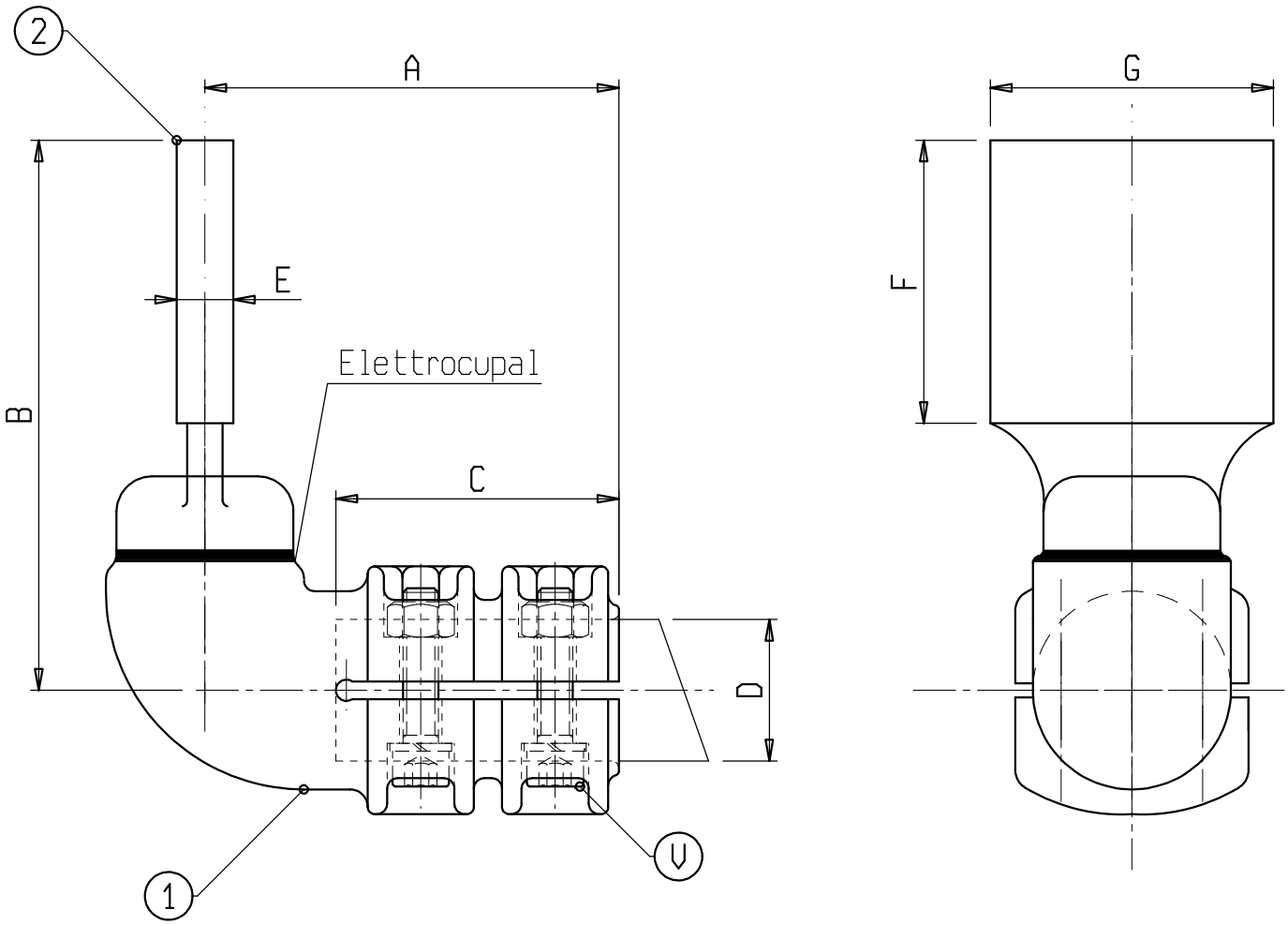

Material: 1 Aluminium alloy 2 Copper alloy

Bolts: Stainless steel

X	ø COND. D	A	B	C	E	F	G	V	X	ø COND. D	A	B	C	E	F	G	V
C 6609AB	30	120	170	80	15	80	80	M10	C 6315AB	40	120	240	80	16	150	100	M10
C 0964AB	30	120	240	80	16	150	100	M10									
C 0965AB	40	120	170	80	15	80	80	M10									

s.r.l. GORLA MORSETTERIE MILANO TECHNICAL OFFICE	90° CONNECTOR FOR Cu STUD AND Al FLAT	DRG. N. 23/BA/X SCALE . DRAWN . / DATE . APPROVED . / DATE .

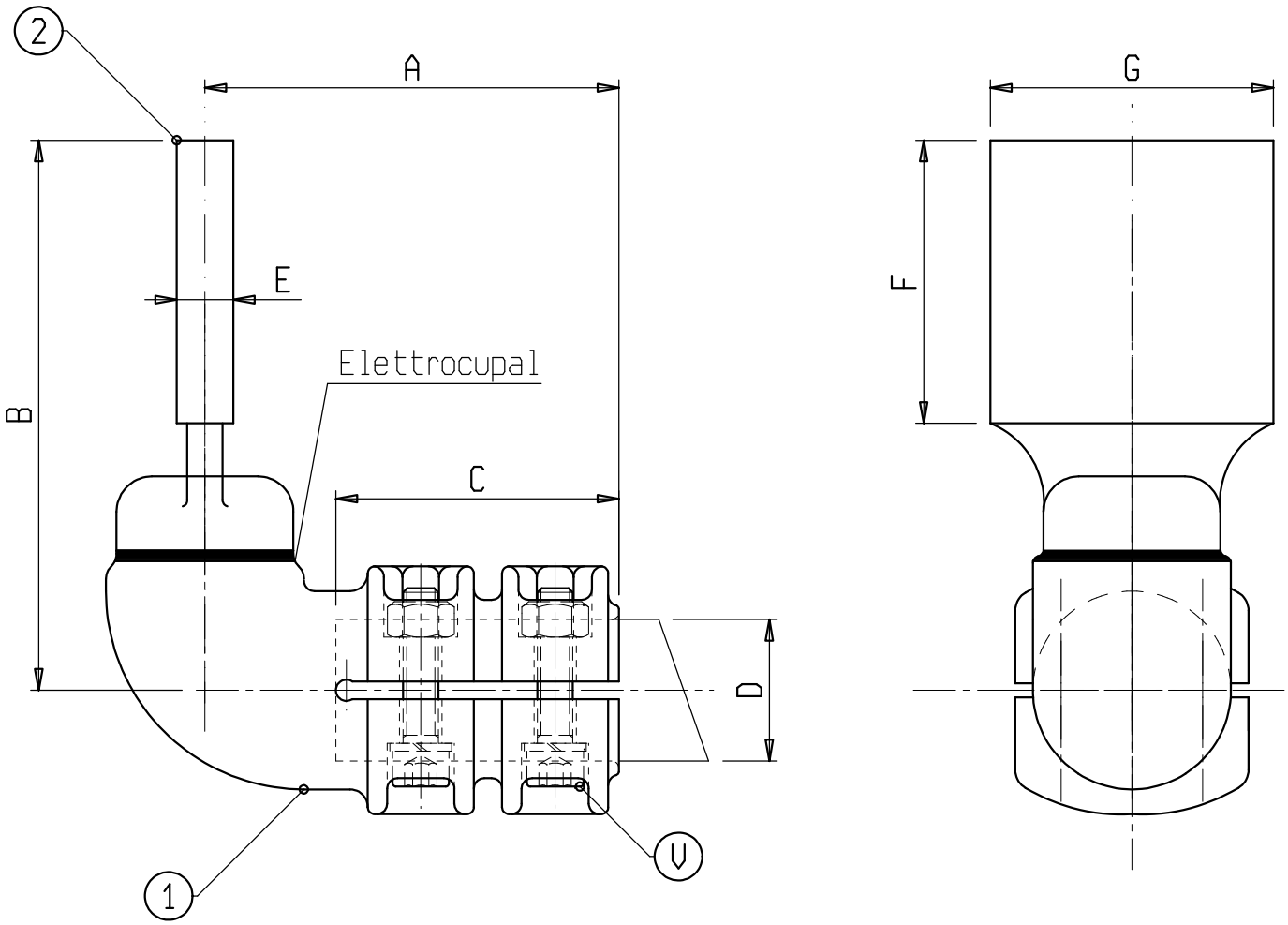

Material: 1 Copper alloy 2 Aluminium alloy

Bolts: Stainless steel

X	ø COND. D	A	B	C	E	F	G	V	X	ø COND. D	A	B	C	E	F	G	V
C 6609BA	30	120	170	80	15	80	80	M10	C 6315BA	40	120	240	80	16	150	100	M10
C 0964BA	30	120	240	80	16	150	100	M10									
C 0965BA	40	120	170	80	15	80	80	M10									