s.r.l. GORLA MORSETTERIE MILANO TECHNICAL OFFICE	90° CONNECTOR PER Cu STUD AND Cu FLAT	DRG. N. 23/BB/X SCALE . DRAWN . / DATE . APPROVED . / DATE .

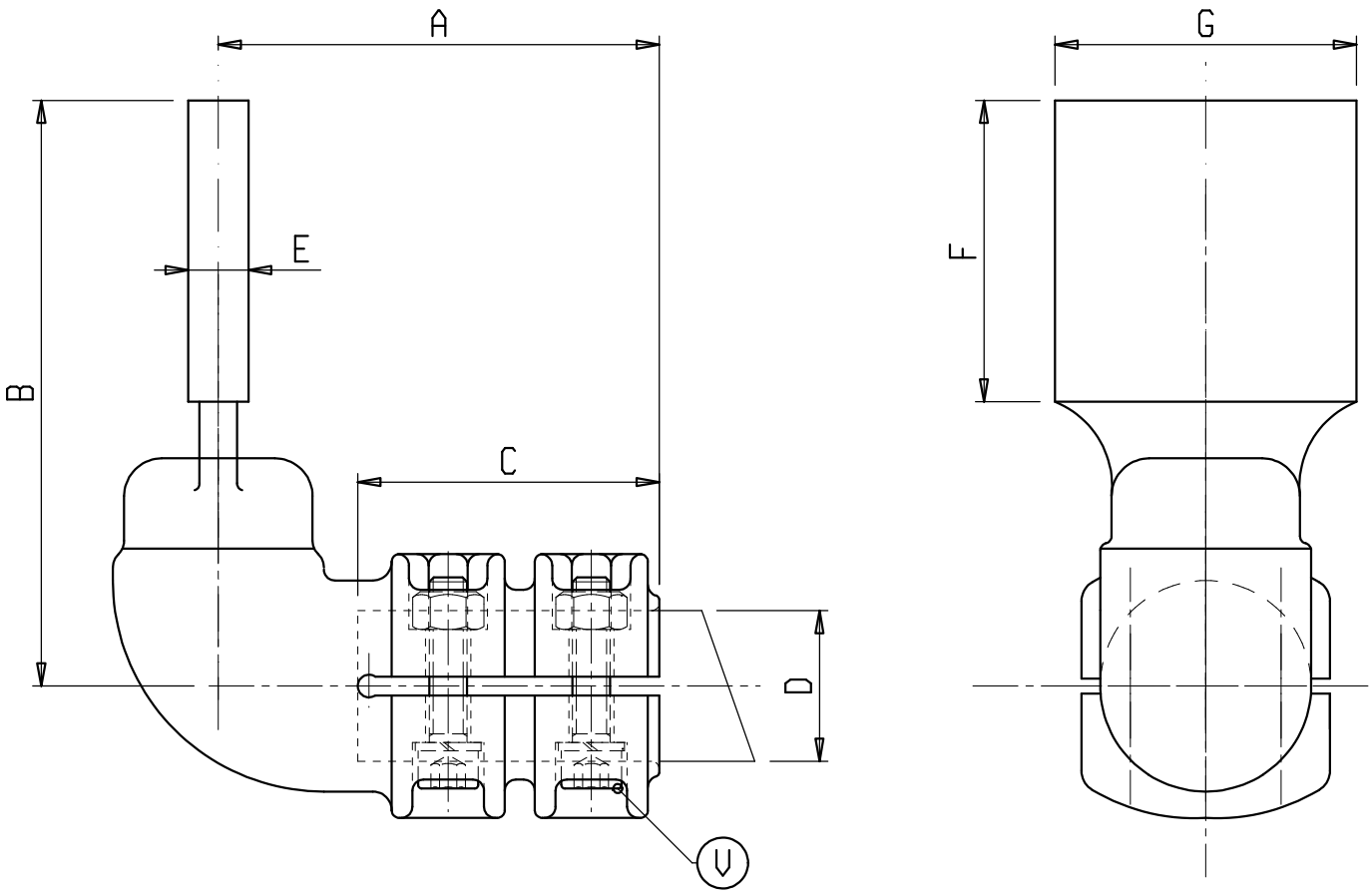

Material: Copper alloy

Bolts: Stainless steel

X	ø COND. D	A	B	C	E	F	G	V	X	ø COND. D	A	B	C	E	F	G	V
C 6609BB	30	120	170	80	15	80	80	M10	C 6315BB	40	120	240	80	16	150	100	M10
C 0964BB	30	120	240	80	16	150	100	M10									
C 0965BB	40	120	170	80	15	80	80	M10									