s.r.l. GORLA
MORSETTERIE
MILANO

TECHNICAL OFFICE

STRAIGHT CONNECTOR
FOR Al STUD
AND Cu FLAT

DRG. N. 16/AB/X

Rev.1 dated 03.03.20

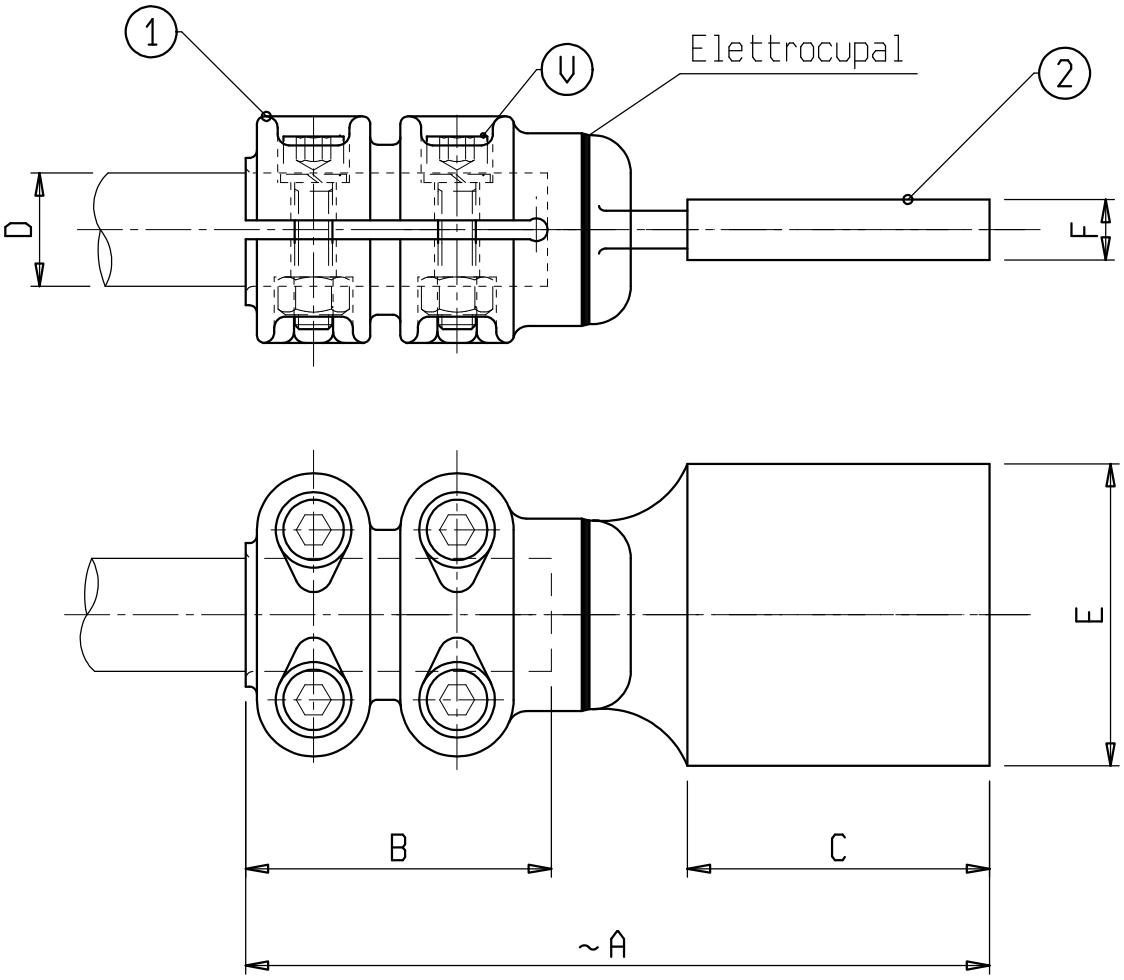

Material: 1 Aluminium alloy 2 Cooper alloy
Bolts: Stainless steel

X	ø COND. D	A	B	C	E	F	V	X	ø COND. D	A	B	C	E	F	V
C 64203AB	40	355	120	120	60	17	M10								
C 64203100AB	40	335	120	100	100	17	M10								

s.r.l. GORLA MORSETTERIE MILANO TECHNICAL OFFICE	STRAIGHT CONNECTOR FOR Cu STUD AND Al FLAT	DRG. N. 16/BA/X SCALE . DRAWN . / DATE . APPROVED . / DATE .

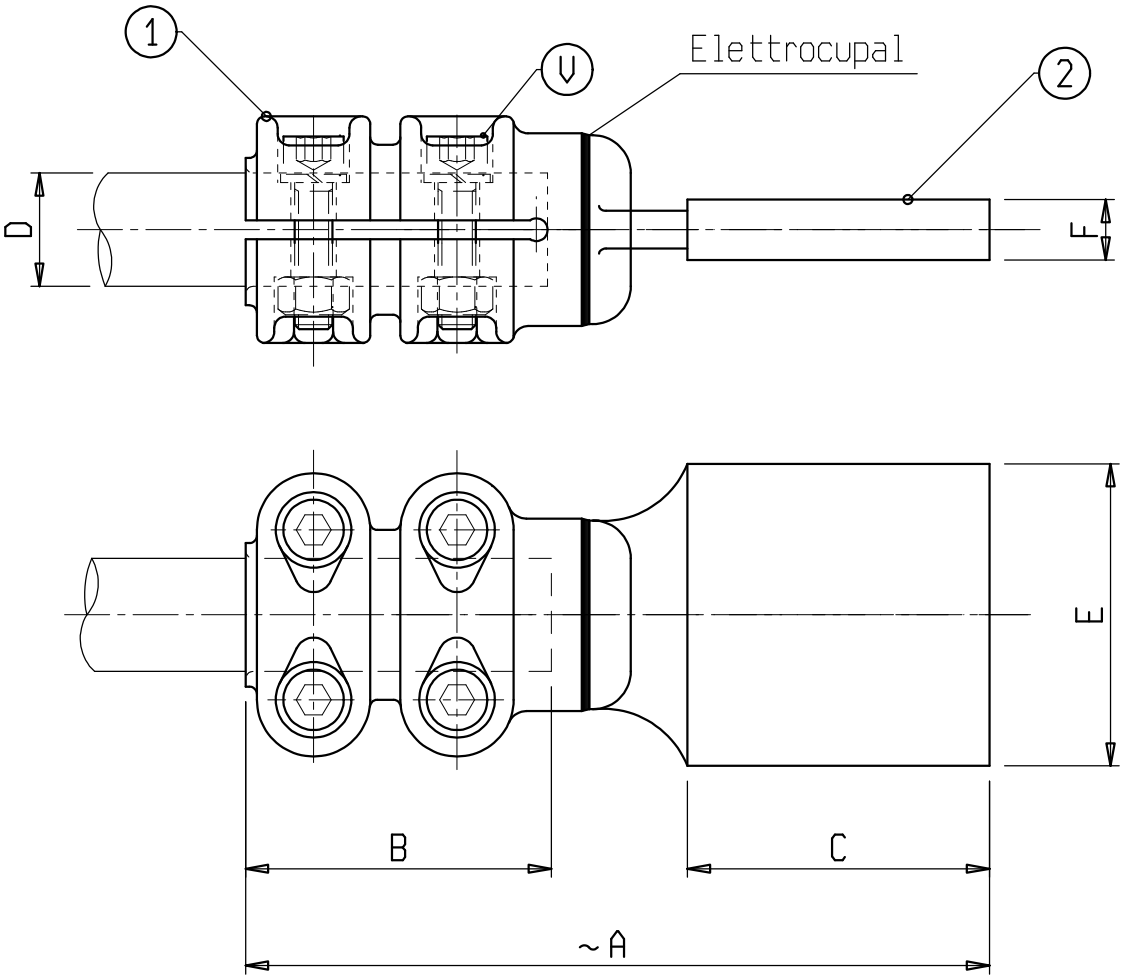

Material: 1 Cooper alloy 2 Aluminium alloy

Bolts: Stainless steel

X	ø COND. D	A	B	C	E	F	V	X	ø COND. D	A	B	C	E	F	V
C 6449BA	20	245	80	100	100	10	M10	C 6700BA	30	355	140	100	150	20	M10
C 6707BA	30	245	80	100	100	10	M10	C 64201BA	40	355	120	120	120	10	M10
C 6303BA	40	225	80	80	80	10	M10	C 64202BA	80	335	120	100	150	20	M10
C 63031BA	40	245	80	100	100	10	M10								
C 6679BA	50	245	80	100	100	10	M10								