s.r.l. GORLA MORSETTERIE MILANO TECHNICAL OFFICE	STRAIGHT CONNECTOR FOR Cu STUD AND Cu FLAT	DRG. N. 16/BB/X SCALE . DRAWN . / DATE . APPROVED . / DATE .

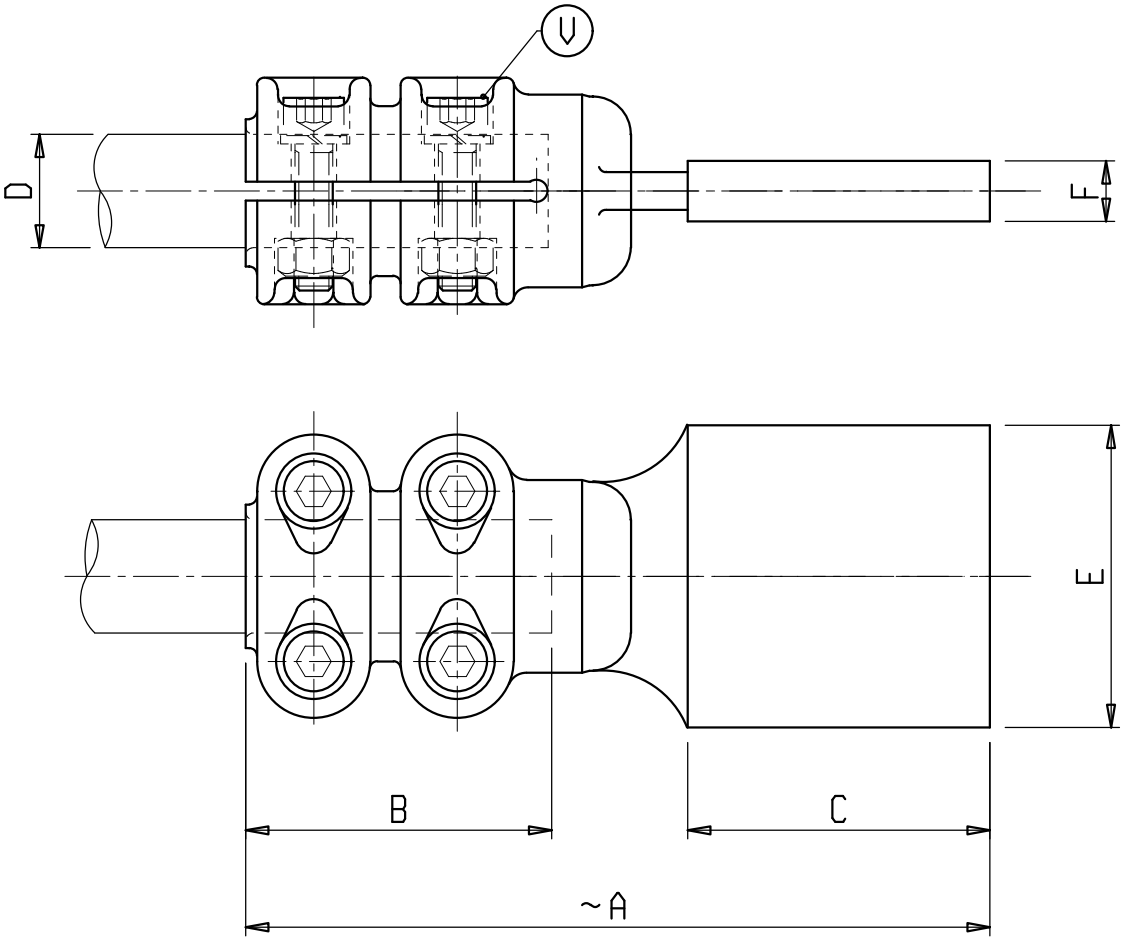

Material: Copper alloy

Bolts: Stainless steel

X	ø COND. D	A	B	C	E	F	V	X	ø COND. D	A	B	C	E	F	V
C 6449BB	20	250	80	100	100	10	M10	C 6700BB	30	360	140	100	150	20	M10
C 6707BB	30	250	80	100	100	10	M10	C 64201BB	40	360	120	120	120	10	M10
C 6303BB	40	230	80	80	80	10	M10	C 64202BB	80	340	120	100	150	20	M10
C 63031BB	40	250	80	100	100	10	M10								
C 6679BB	50	250	80	100	100	10	M10								

s.r.l. GORLA
MORSETTERIE
MILANO

TECHNICAL OFFICE

STRAIGHT CONNECTOR
FOR Cu CONDUCTOR AND Cu FLAT

DRG. N. 73/BB/X

Rev.1 dated 11.09.15

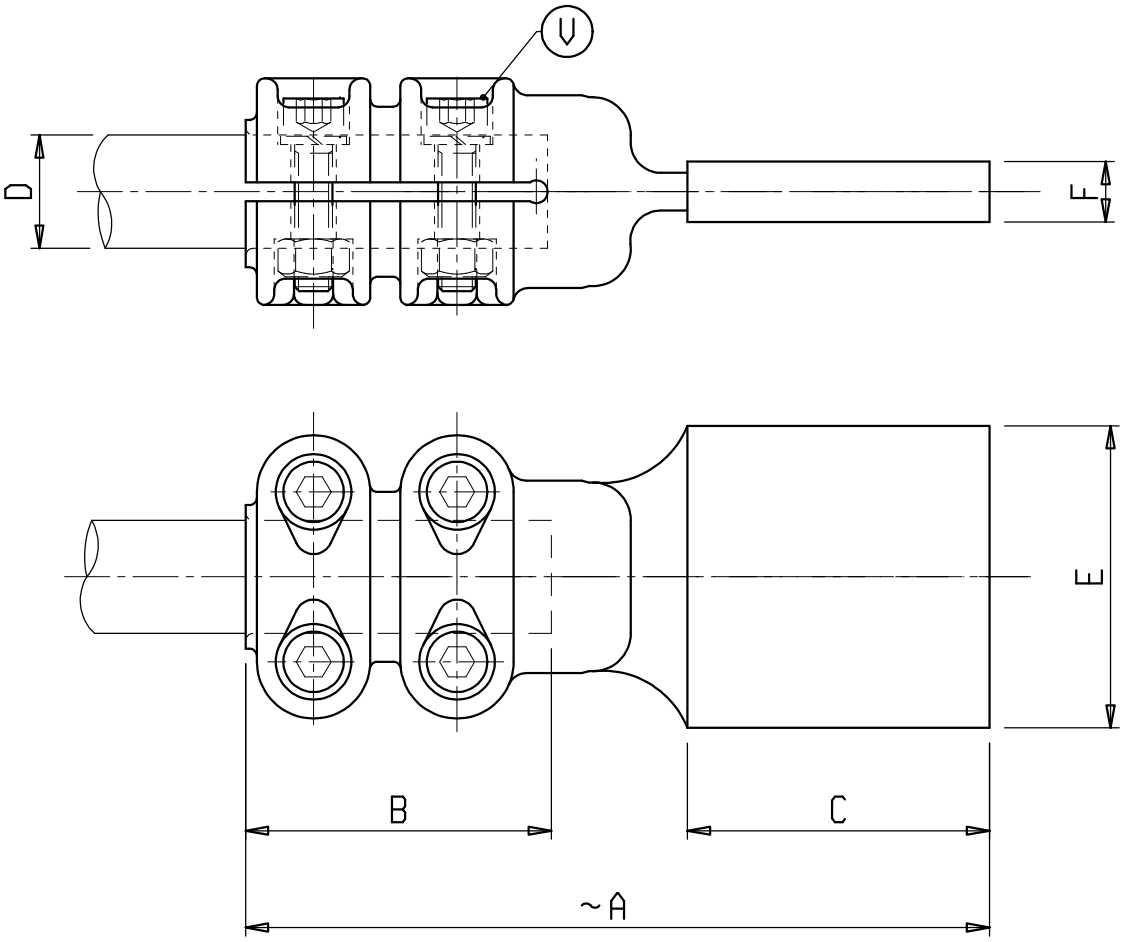

Material: Copper alloy
Bolts: Stainless steel

X	ø COND. D	A	B	C	E	F	V	X	ø COND. D	A	B	C	E	F	V
C 6247-4BB	30	180	80	80	80	10	M10								
C 6247-1BB	30	180	80	80	60	8	M10								
C 6247-2BB	30	160	80	60	60	8	M10								
C 6247-3BB	30	160	80	60	80	10	M10								