s.r.l. GORLA
MORSETTERIE
MILANO

TECHNICAL OFFICE

STRAIGHT CONNECTOR
FOR Al CONDUCTOR AND Cu FLAT

DRG. N. 15/AB/X

Rev.3 dated 24.01.12

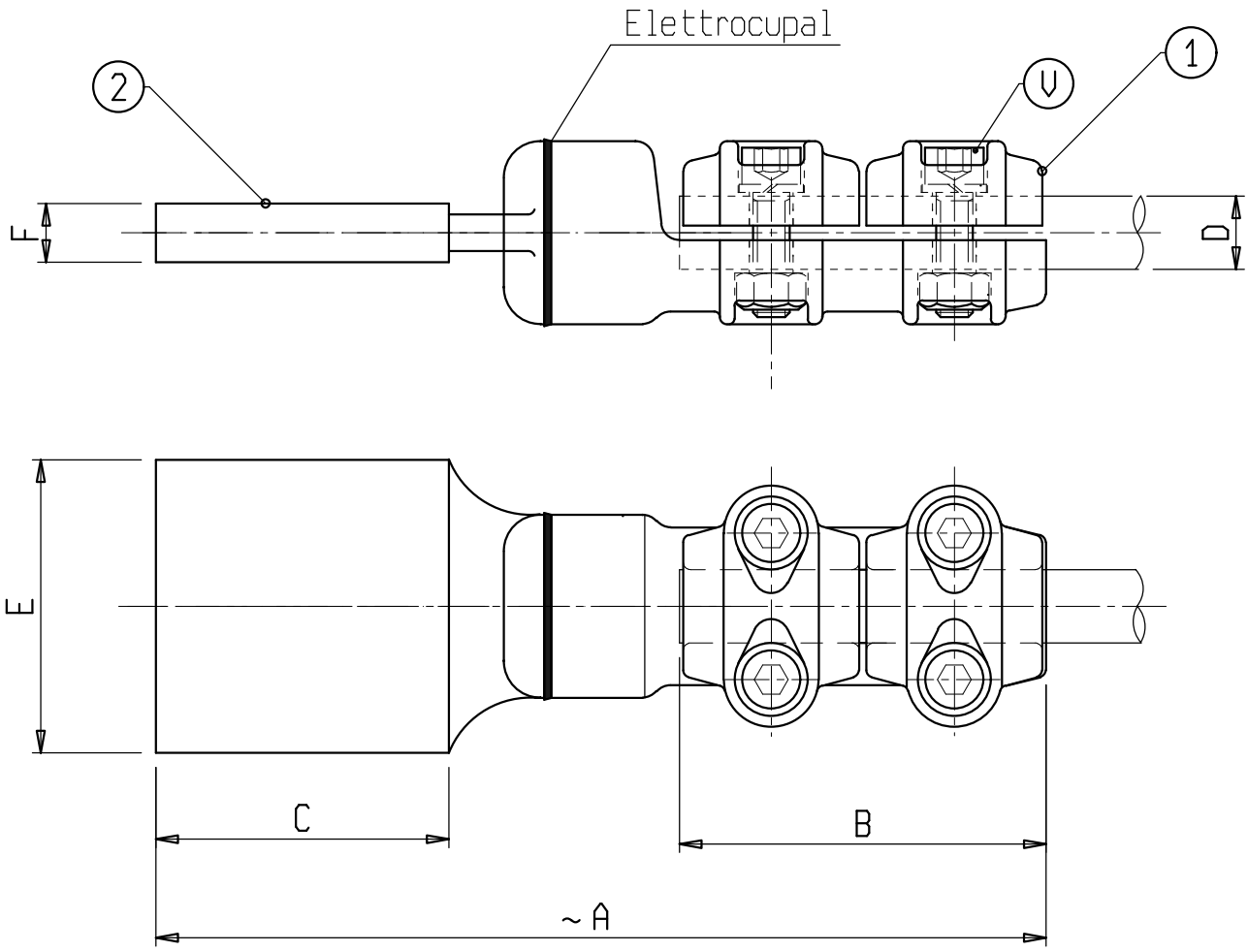

Material: 1 Aluminium alloy 2 Cooper alloy

Bolts: Stainless steel

X	ø COND. D	A	B	C	E	F	V	X	ø COND. D	A	B	C	E	F	V
C 6291ABP	12-20	225	100	60	60	6	M10	C 0380AB	32-36	265	100	100	100	10	M10
C 6529ABP	12-20	245	100	80	80	8	M10	C 0376AB	32-36	270	100	105	185	14	M10
C 6553AB	12-20	265	100	100	100	10	M10	C 6592AB	36-40	245	100	80	80	10	M10
C 6577AB	25-32	265	100	100	100	10	M10								

s.r.l. GORLA
MORSETTERIE
MILANO

TECHNICAL OFFICE

STRAIGHT CONNECTOR
FOR Cu CONDUCTOR AND Al FLAT

DRG. N. 15/BA/X

Rev.3 dated 24.01.12

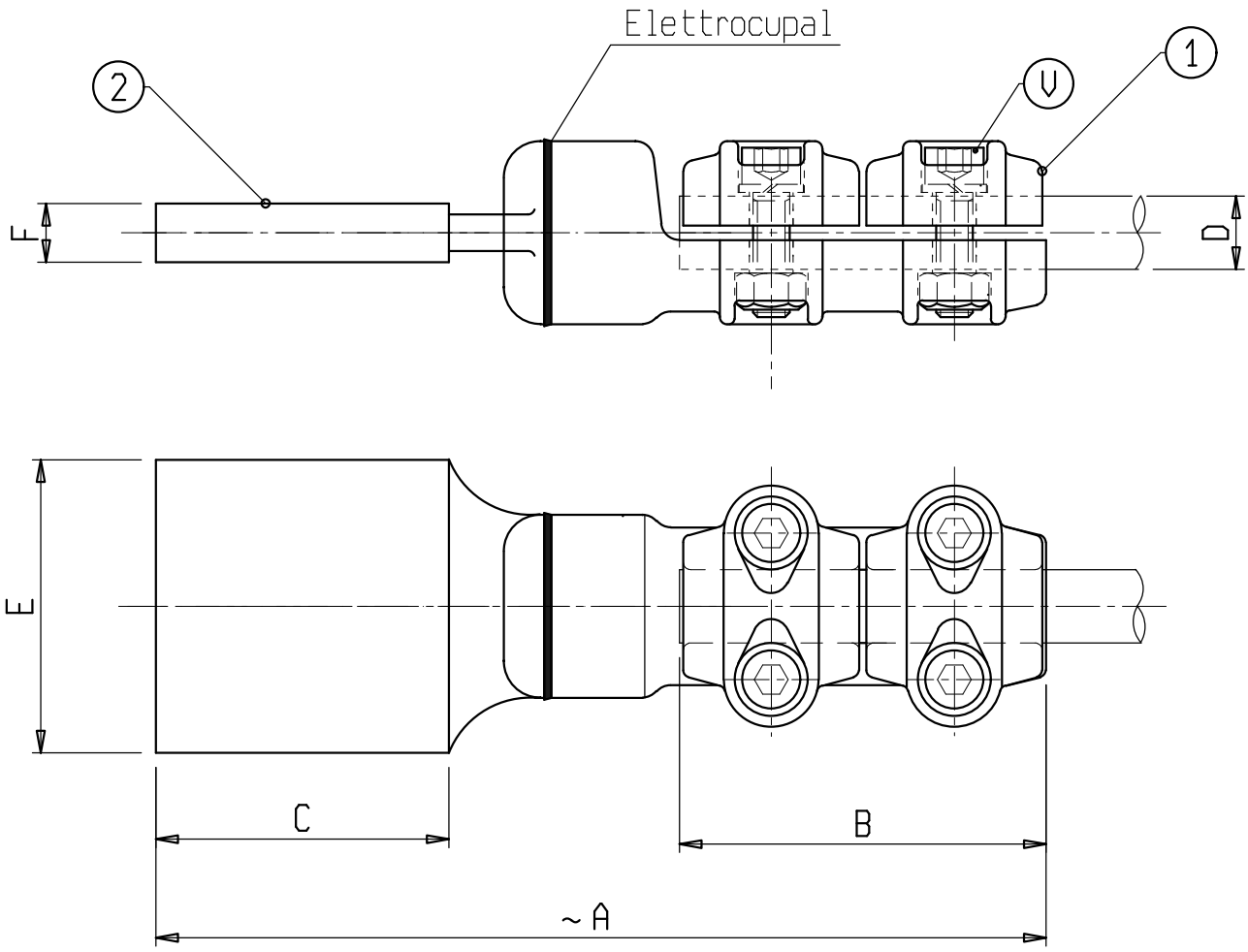

Material: 1 Cooper alloy 2 Aluminium alloy

Bolts: Stainless steel

X	ø COND. D	A	B	C	E	F	V	X	ø COND. D	A	B	C	E	F	V
C 6291BAP	12-20	225	100	60	60	6	M10								
C 6529BAP	12-20	245	100	80	80	10	M10								
C 6553BA	12-20	265	100	100	100	10	M10								
C 6577BA	25-32	265	100	100	100	16	M10								