s.r.l. GORLA
MORSETTERIE
MILANO

TECHNICAL OFFICE

STRAIGHT CONNECTOR
FOR Cu CONDUCTOR AND Cu FLAT

DRG. N. 14/BB/X

Rev.2 del 01.07.08

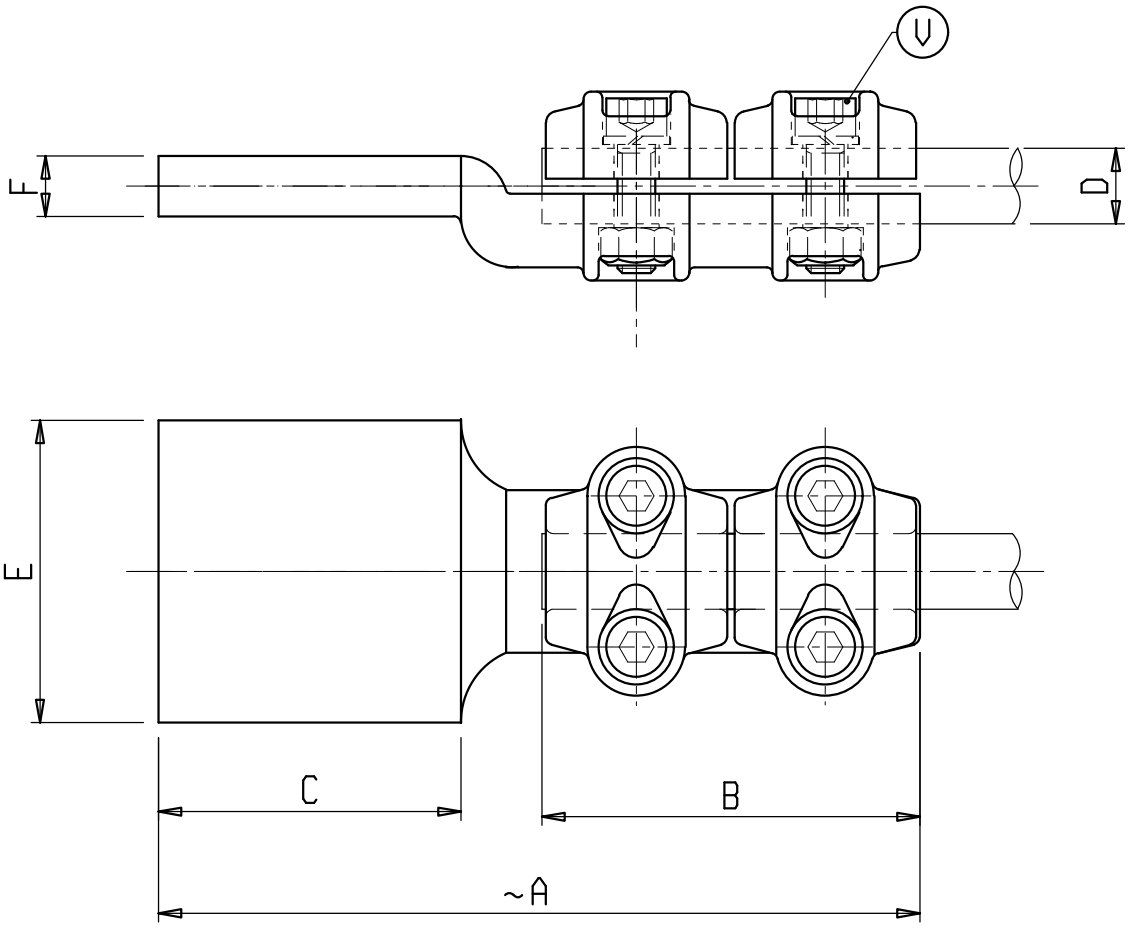

Material: Copper alloy
Bolts: Stainless steel

X	ø COND. D	A	B	C	E	F	V	X	ø COND. D	A	B	C	E	F	V
C 61291BR	12-20	180	100	60	50	10	M10	C 6123BR	36-40	180	100	60	50	10	M10
C 61292BR	12-20	200	100	80	80	10	M10	C 61231BR	36-40	220	100	100	100	16	M10
C 61293BR	12-20	200	100	80	80	15	M10	C 61232BR	36-40	220	100	100	200	16	M10
C 6494BR	20-25	220	100	100	80	12	M10	C 0184BR	45-50	220	100	100	100	15	M10
C 6577BR	25-32	220	100	100	100	15	M10	C 6561BR	55-60	200	100	80	80	15	M10
C 65771BR	25-32	245	100	125	125	15	M10								

s.r.l. GORLA
MORSETTERIE
MILANO

TECHNICAL OFFICE

STRAIGHT CONNECTOR
FOR Cu CONDUCTOR AND Cu FLAT

DRG. N. 15/BB/X

Rev.2 dated 03.05.10

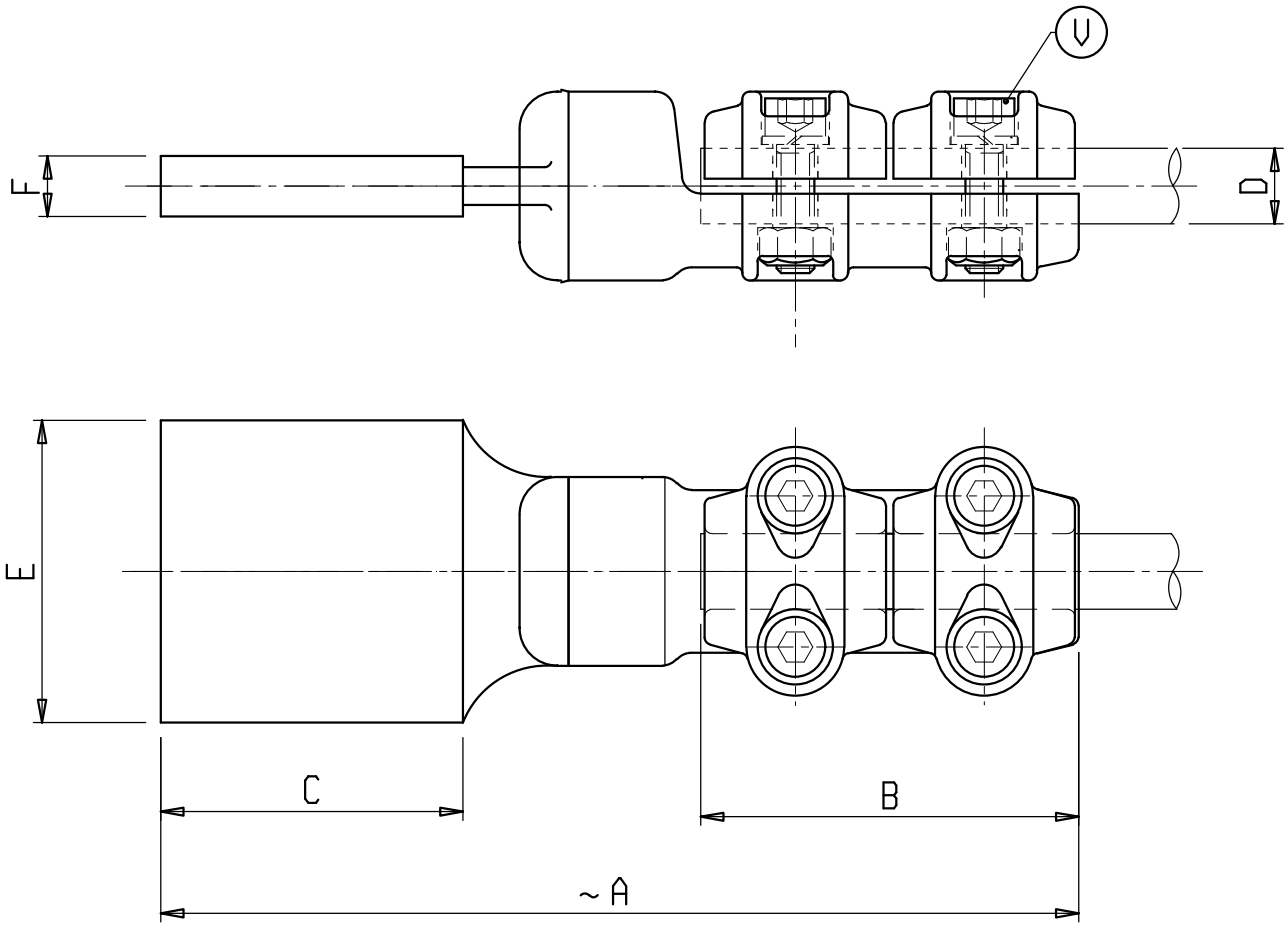

Material: Copper alloy
Bolts: Stainless steel

X	ø COND. D	A	B	C	E	F	V	X	ø COND. D	A	B	C	E	F	V
C 6291BB	12-20	230	100	60	60	6	M10	C 0380BB	32-36	270	100	100	100	10	M10
C 6529BB	12-20	250	100	80	80	8	M10	C 0376BB	32-36	275	100	105	185	14	M10
C 6553BB	12-20	270	100	100	100	10	M10	C 6592BB	36-40	250	100	80	80	10	M10
C 6577BB	25-32	270	100	100	100	10	M10								