s.r.l. GORLA
MORSETTERIE
MILANO

TECHNICAL OFFICE

STRAIGHT CONNECTOR
FOR Al CONDUCTOR AND Al FLAT

DRG. N. 14/AA/X

Rev.3 del 05.03.19

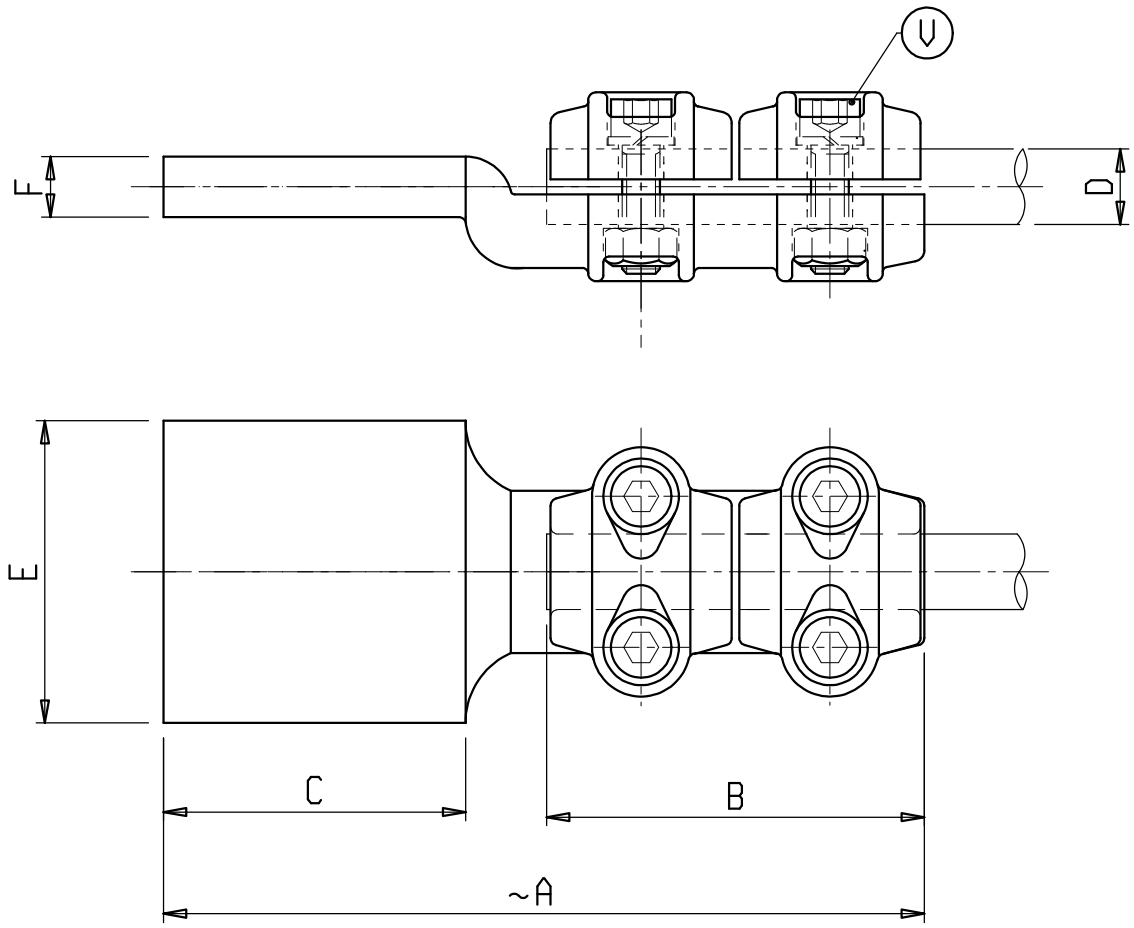

Material: Aluminium alloy
Bolts: Stainless steel

X	ø COND. D	A	B	C	E	F	V	X	ø COND. D	A	B	C	E	F	V
C 61291GA	12-20	180	100	60	50	10	M10	C 6123GAL	36-40	180	100	60	50	10	M10
C 61292GA	12-20	200	100	80	80	10	M10	C 61231GA	36-40	220	100	100	100	16	M10
C 61293GA	12-20	200	100	80	80	15	M10	C 61232GA	36-40	220	100	100	200	16	M10
C 61294GA	12-20	220	100	100	100	15	M10	C 0184GAL	45-50	220	100	100	100	15	M10
C 6494GAL	20-25	220	100	100	80	12	M10	C 6561GAL	55-60	200	100	80	80	15	M10
C 6577GAL	25-32	220	100	100	100	15	M10								
C 65771GA	25-32	245	100	125	125	15	M10								

s.r.l. GORLA
MORSETTERIE
MILANO

TECHNICAL OFFICE

STRAIGHT CONNECTOR
FOR Al CONDUCTOR AND Al FLAT

DRG. N. 15/AA/X

Rev.4 dated 03.03.20

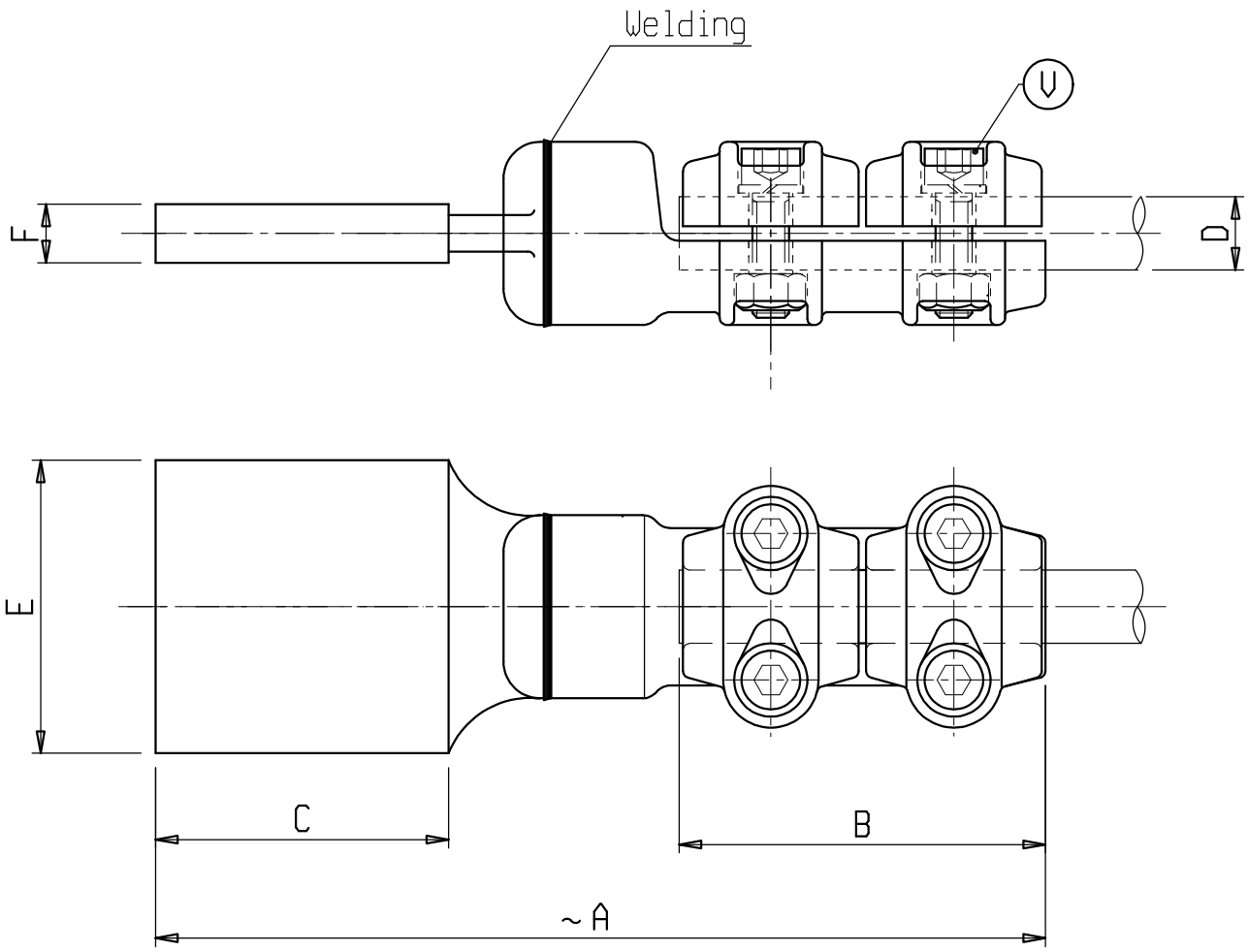

Material: Aluminium alloy
Bolts: Stainless steel

X	ø COND. D	A	B	C	E	F	V	X	ø COND. D	A	B	C	E	F	V
C 6291AAP	12-20	230	100	60	60	6	M10	C 0380-120AA	32-36	290	100	120	100	10	M10
C 6529AAP	12-20	250	100	80	80	8	M10	C 0376AA	32-36	275	100	105	185	14	M10
C 6553AA	12-20	270	100	100	100	10	M10	C 6592AA	36-40	250	100	80	80	10	M10
C 1651AA	20-25	290	100	120	100	10	M10	C 1597AA	36-40	270	100	100	100	10	M10
C 6577AA	25-32	270	100	100	100	10	M10	C 1597-120AA	36-40	290	100	120	100	10	M10
C 6577-120AA	25-32	290	100	120	100	10	M10								
C 0380AA	32-36	270	100	100	100	10	M10								