s.r.l. GORLA
MORSETTERIE
MILANO

TECHNICAL OFFICE

T BOLT CONNECTOR
FOR Al CONDUCTOR RUN AND Cu FLAT TAP

DRG. N. 08/AB/X

SCALE .

DRAWN	DATE
.	.
APPROVED	DATE
.	.

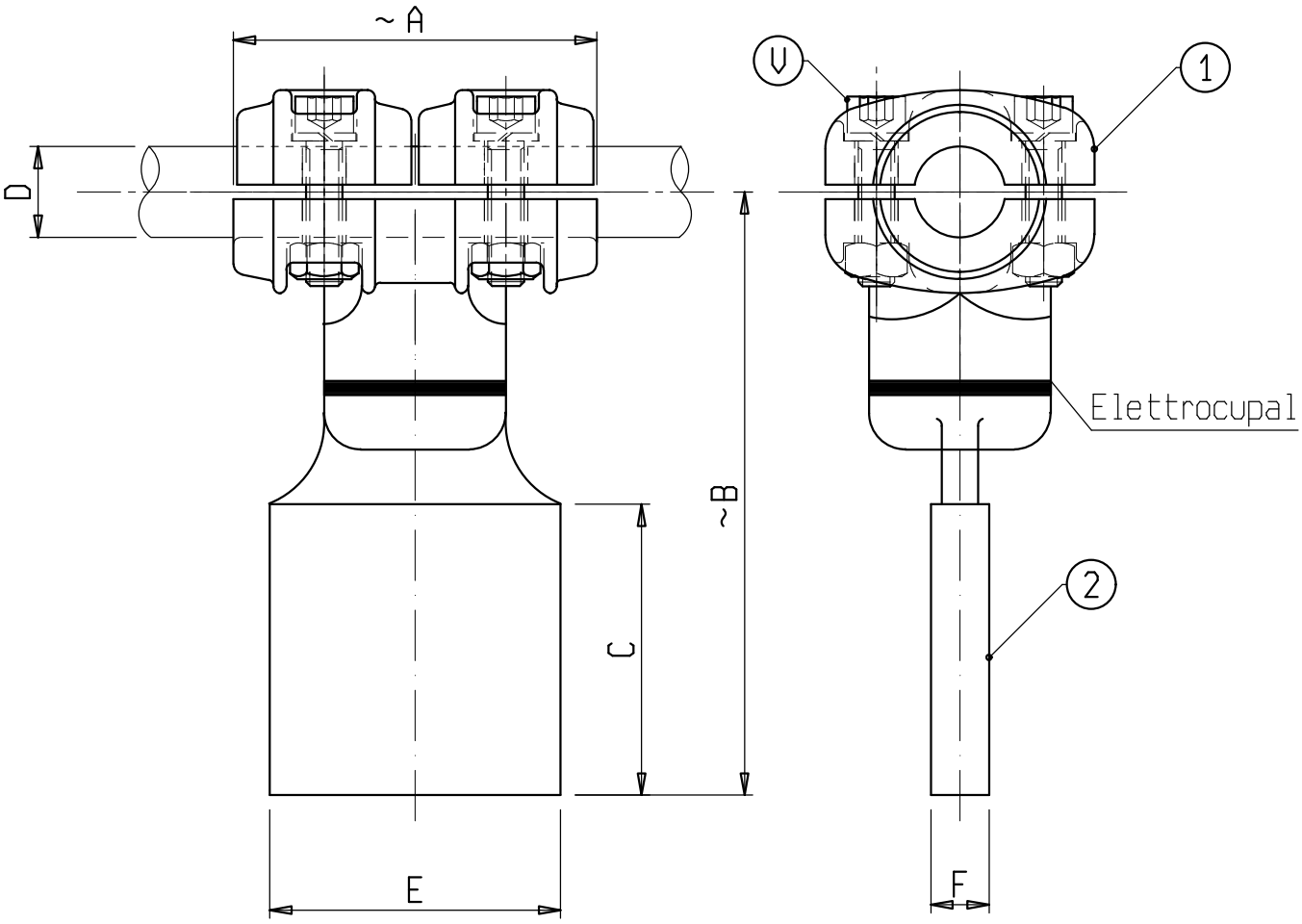

Material: 1 Aluminium alloy; 2 Copper alloy

Bolts: Stainless steel

X	ø COND. D	A	B	C	E	F	V	X	ø COND. D	A	B	C	E	F	V
C 0535AB	12-20	100	160	80	80	15	M10	C 0553AB	32-36	100	185	100	100	15	M10
C 0543AB	12-20	100	180	100	100	15	M10	C 0554AB	36-40	100	170	80	80	15	M10
C 0545AB	20-25	100	160	80	80	15	M10	C 0555AB	36-40	100	190	100	100	15	M10
C 0550AB	20-25	100	180	100	100	15	M10	C 6053AB	36-40	100	240	100	150	20	M10
C 0551AB	25-32	100	160	80	80	15	M10								
C 6775AB	25-32	100	180	100	100	15	M10								
C 6546AB	32-36	100	165	80	80	15	M10								

s.r.l. GORLA MORSETTERIE MILANO TECHNICAL OFFICE	T BOLT CONNECTOR FOR Cu CONDUCTOR RUN AND Al FLAT TAP	DRG. N. 08/BA/X SCALE . DRAWN . / DATE . APPROVED . / DATE .

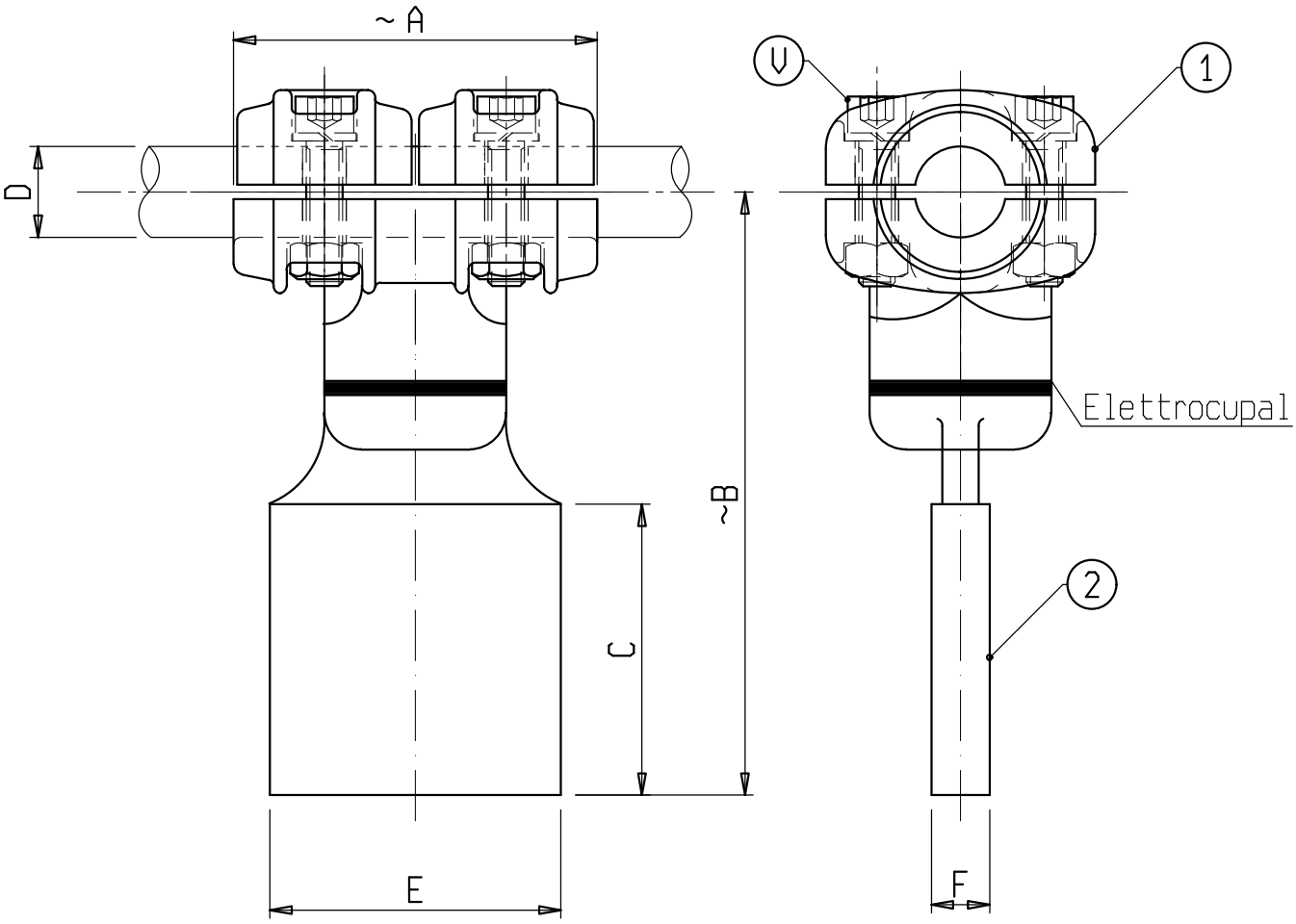

Material: 1 Copper alloy; 2 Aluminium alloy

Bolts: Stainless steel

X	ø COND. D	A	B	C	E	F	V	X	ø COND. D	A	B	C	E	F	V
C 0535BA	12-20	100	160	80	80	15	M10	C 0550BA	20-25	100	180	100	100	15	M10
C 0543BA	12-20	100	180	100	100	15	M10								
C 0545BA	20-25	100	160	80	80	15	M10								

s.r.l. GORLA
MORSETTERIE
MILANO

TECHNICAL OFFICE

T BOLT CONNECTOR
FOR Al CONDUCTOR RUN AND TRANSVERSE Cu FLAT TAP

DRG. N. 09/AB/X

SCALE .

DRAWN	DATE
.	.
APPROVED	DATE
.	.

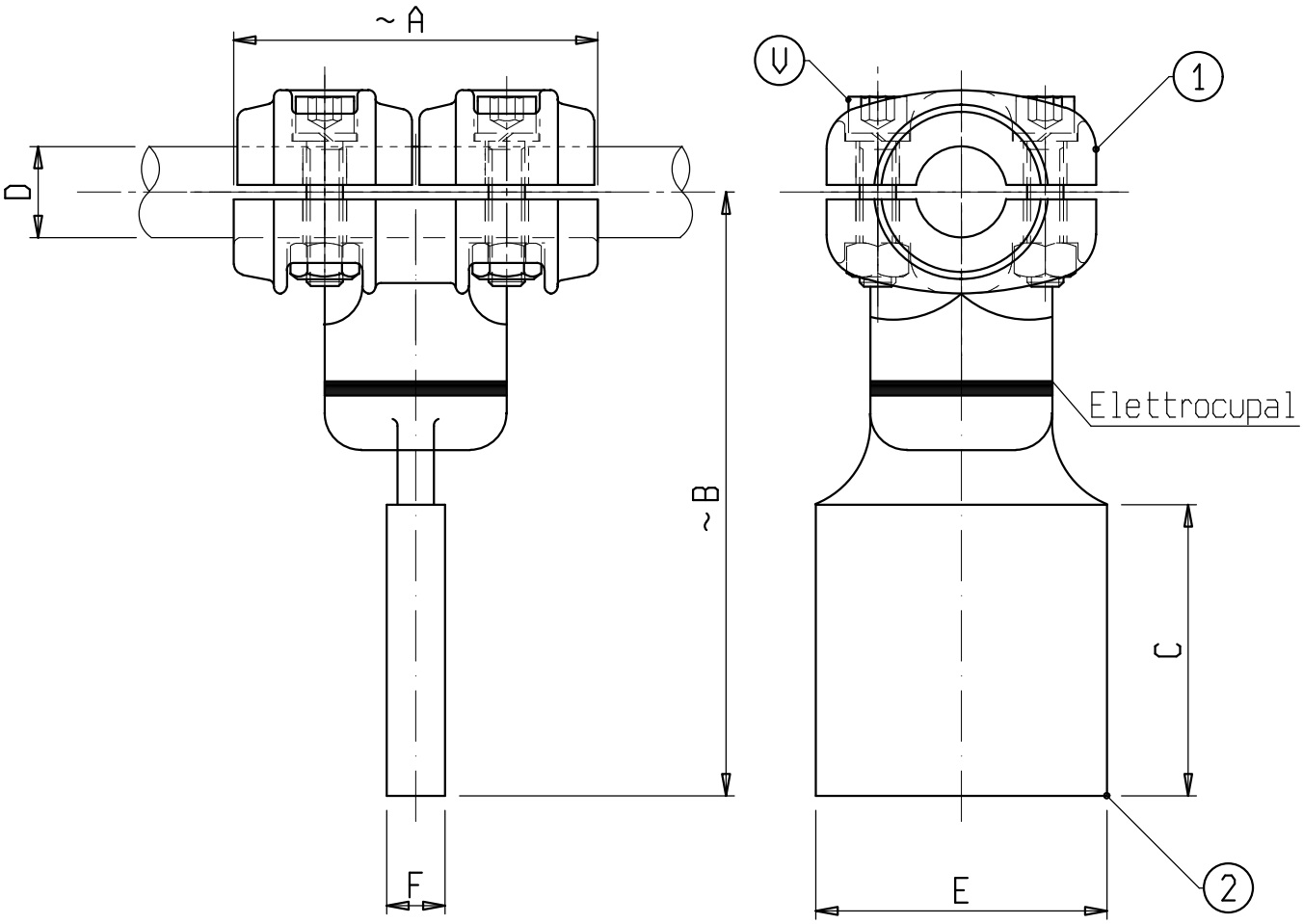

Material: 1 Aluminium alloy; 2 Copper alloy

Bolts: Stainless steel

X	ø COND. D	A	B	C	E	F	V	X	ø COND. D	A	B	C	E	F	V
C0535AB90	12-20	100	160	80	80	15	M10	C6546AB90	31,5-36	100	165	80	80	15	M10
C0543AB90	12-20	100	180	100	100	15	M10	C0553AB90	32-36	100	185	100	100	15	M10
C0545AB90	20-25	100	160	80	80	15	M10	C0554AB90	36-40	100	170	80	80	15	M10
C0550AB90	20-25	100	180	100	100	15	M10	C0555AB90	36-40	100	190	100	100	15	M10
C0552AB90	25-32	100	160	80	50	15	M10	C6053AB90	36-40	100	240	100	150	20	M10
C0551AB90	25-32	100	160	80	80	15	M10								
C6775AB90	25-32	100	180	100	100	15	M10								

s.r.l. GORLA
MORSETTERIE
MILANO

TECHNICAL OFFICE

T BOLT CONNECTOR
FOR Cu CONDUCTOR RUN AND TRANSVERSE Al FLAT TAP

DRG. N. 09/BA/X

SCALE .

DRAWN	DATE
.	.
APPROVED	DATE
.	.

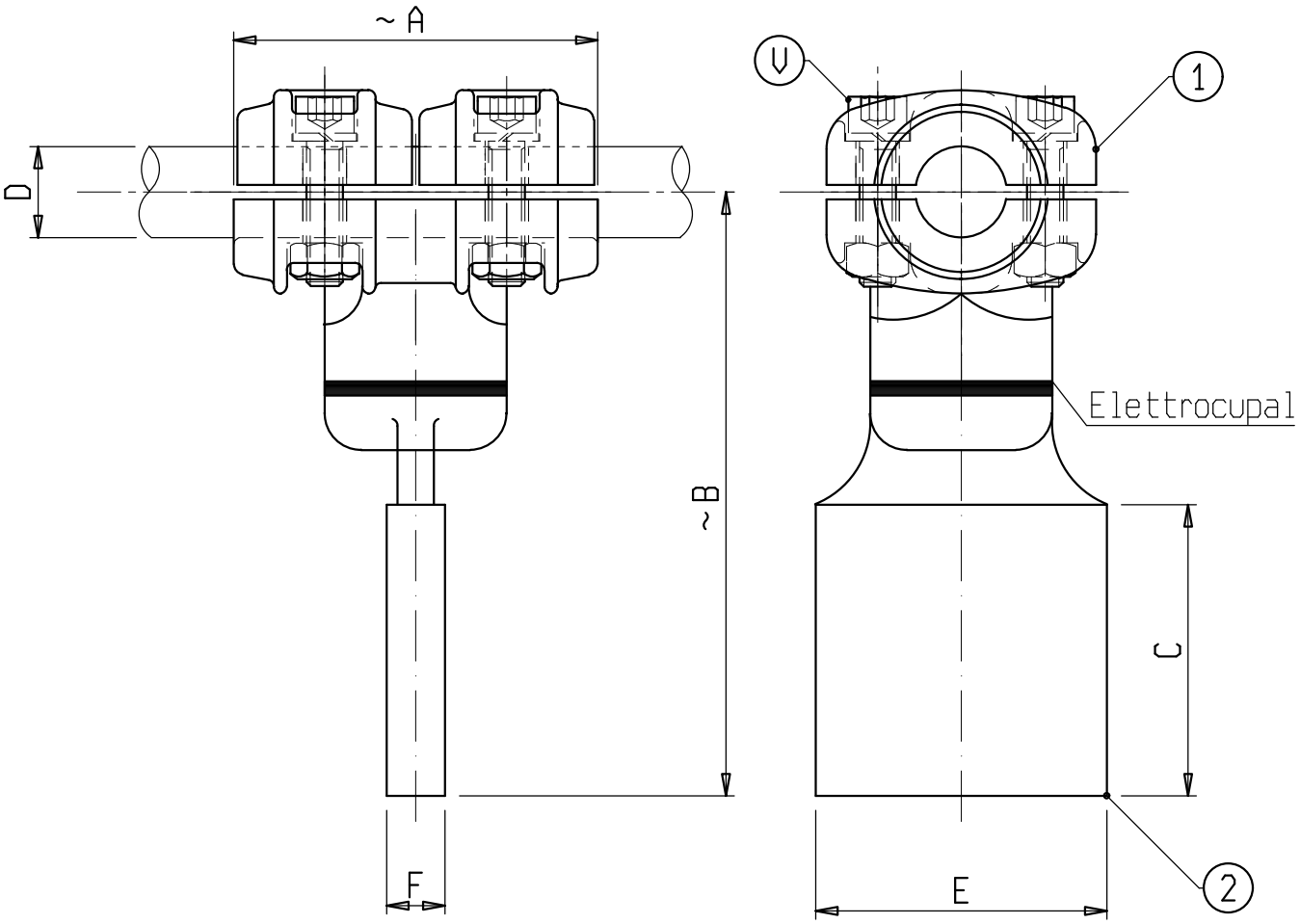

Material: 1 Copper alloy; 2 Aluminium alloy
Bolts: Stainless steel

X	ø COND. D	A	B	C	E	F	V	X	ø COND. D	A	B	C	E	F	V
C0535BA90	12-20	100	160	80	80	15	M10	C0550BA90	20-25	100	180	100	100	15	M10
C0543BA90	12-20	100	180	100	100	15	M10								
C0545BA90	20-25	100	160	80	80	15	M10								