s.r.l. GORLA
MORSETTERIE
MILANO

TECHNICAL OFFICE

T BOLT CONNECTOR
FOR Cu CONDUCTOR RUN AND Cu FLAT TAP

DRG. N. 08/BB/X

SCALE .

DRAWN	DATE
.	.
APPROVED	DATE
.	.

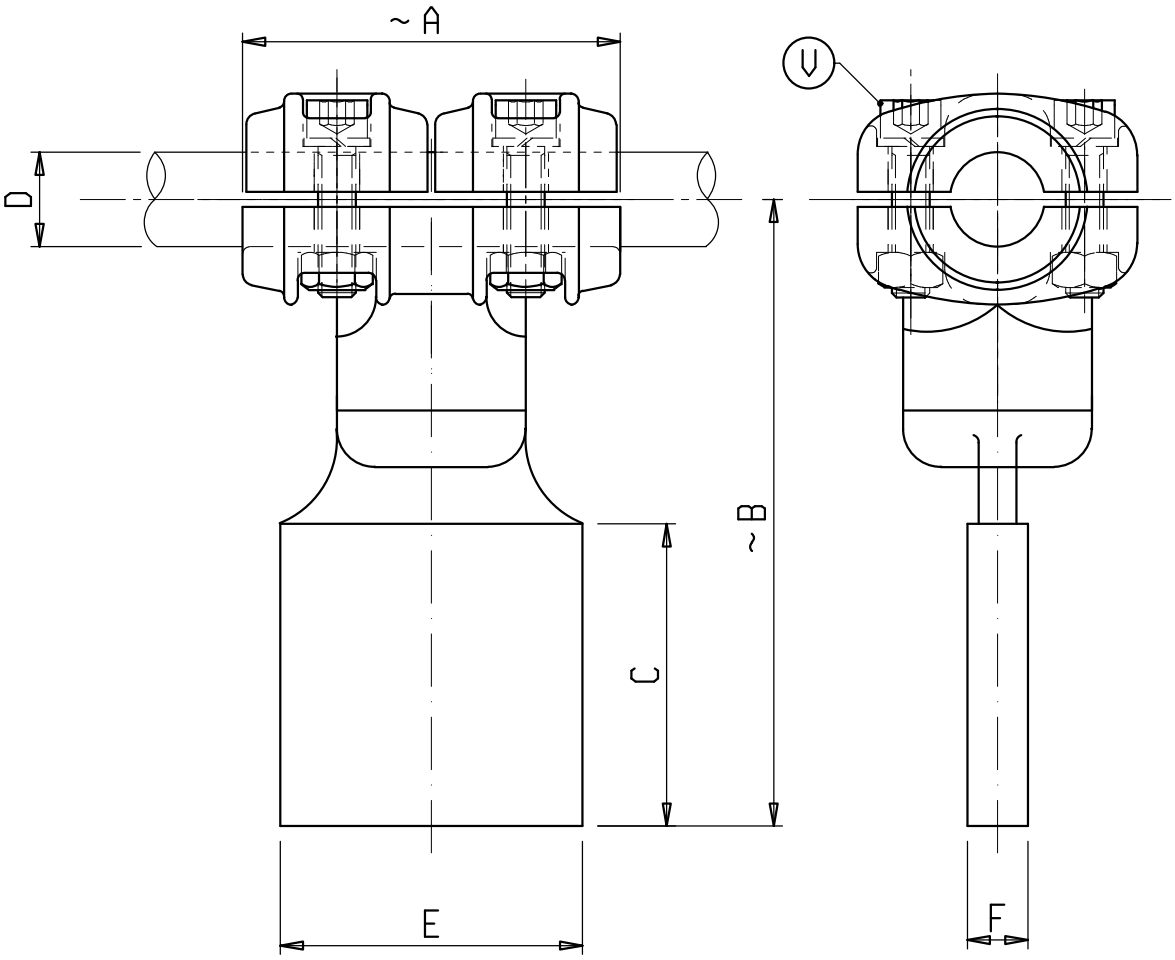

Material: Copper alloy
Bolts: Stainless steel

X	ø COND. D	A	B	C	E	F	V	X	ø COND. D	A	B	C	E	F	V
C 0536BB	12-20	100	165	80	50	15	M10	C 6546BB	32-36	100	170	80	80	15	M10
C 0535BB	12-20	100	165	80	80	15	M10	C 0553BB	32-36	100	190	100	100	15	M10
C 0543BB	12-20	100	185	100	100	15	M10	C 0554BB	36-40	100	175	80	80	15	M10
C 0545BB	20-25	100	165	80	80	15	M10	C 0555BB	36-40	100	195	100	100	15	M10
C 0550BB	20-25	100	185	100	100	15	M10	C 6053BB	36-40	100	245	100	150	20	M10
C 0551BB	25-32	100	165	80	80	15	M10								
C 6775BB	25-32	100	185	100	100	15	M10								

s.r.l. GORLA
MORSETTERIE
MILANO

TECHNICAL OFFICE

T BOLT CONNECTOR
FOR Cu CONDUCTOR RUN AND TRANSVERSE Cu FLAT TAP

DRG. N. 09/BB/X	
SCALE .	
DRAWN .	DATE .
APPROVED .	DATE .

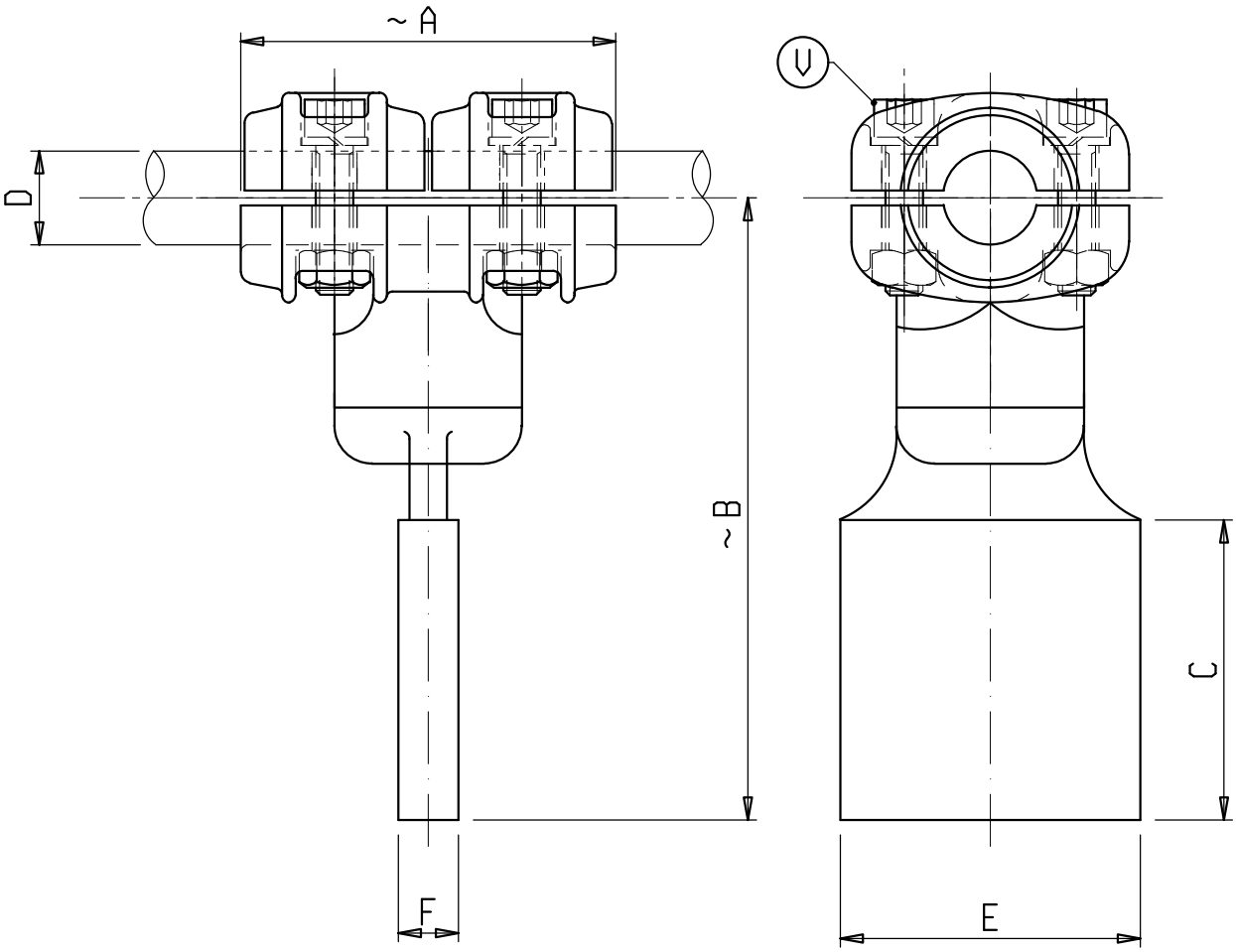

Material: Copper alloy
Bolts: Stainless steel

X	ø COND. D	A	B	C	E	F	V	X	ø COND. D	A	B	C	E	F	V
C0535BB90	12-20	100	165	80	80	15	M10	C6546BB90	32-36	100	170	80	80	15	M10
C0543BB90	12-20	100	185	100	100	15	M10	C0553BB90	32-36	100	190	100	100	15	M10
C0545BB90	20-25	100	165	80	80	15	M10	C0554BB90	36-40	100	175	80	80	15	M10
C0550BB90	20-25	100	185	100	100	15	M10	C0555BB90	36-40	100	195	100	100	15	M10
C0552BB90	25-32	100	165	80	50	15	M10	C6053BB90	36-40	100	245	100	150	20	M10
C0551BB90	25-32	100	165	80	80	15	M10								
C6775BB90	25-32	100	185	100	100	15	M10								