s.r.l. GORLA
MORSETTERIE MILANO

TECHNICAL OFFICE

T BOLT CONNECTOR
FOR Al CONDUCTOR RUN AND Al FLAT TAP

DRG. N. 08/AA/X

SCALE .

DRAWN	DATE
.	.
APPROVED	DATE
.	.

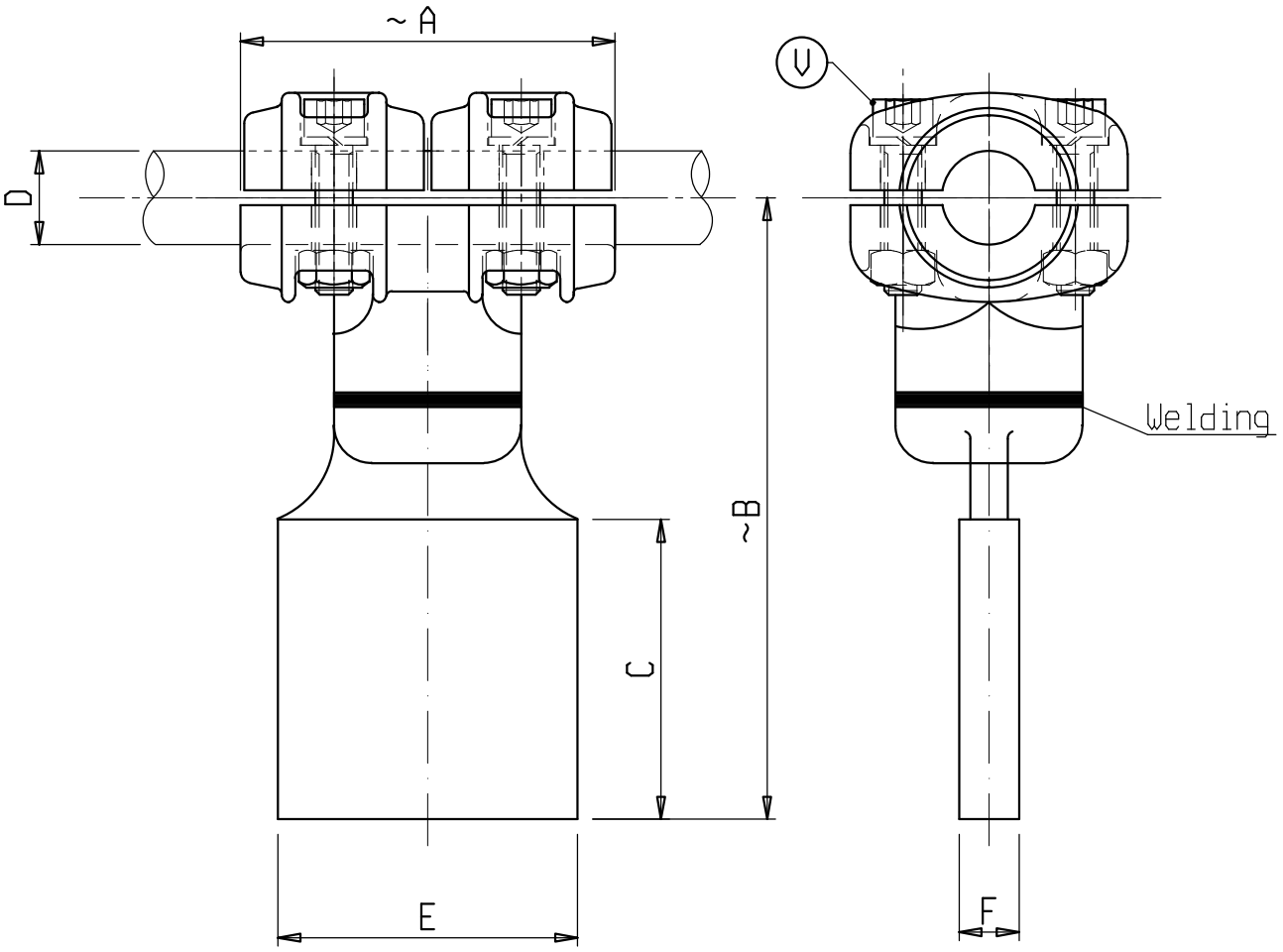

Material: Aluminium alloy

Bolts: Stainless steel

X	ø COND. D	A	B	C	E	F	V	X	ø COND. D	A	B	C	E	F	V
C 0535AA	12-20	100	165	80	80	15	M10	C 0553AA	32-36	100	190	100	100	15	M10
C 0543AA	12-20	100	185	100	100	15	M10	C 0554AA	36-40	100	175	80	80	15	M10
C 0545AA	20-25	100	165	80	80	15	M10	C 0555AA	36-40	100	195	100	100	15	M10
C 0550AA	20-25	100	185	100	100	15	M10	C 6053AA	36-40	100	245	100	150	20	M10
C 0551AA	25-32	100	165	80	80	15	M10								
C 6775AA	25-32	100	185	100	100	15	M10								
C 6546AA	32-36	100	170	80	80	15	M10								

s.r.l. GORLA
MORSETTERIE
MILANO

TECHNICAL OFFICE

T BOLT CONNECTOR
FOR Al CONDUCTOR RUN AND TRANSVERSE Al FLAT TAP

DRG. N. 09/AA/X	
SCALE .	
DRAWN .	DATE .
APPROVED .	DATE .

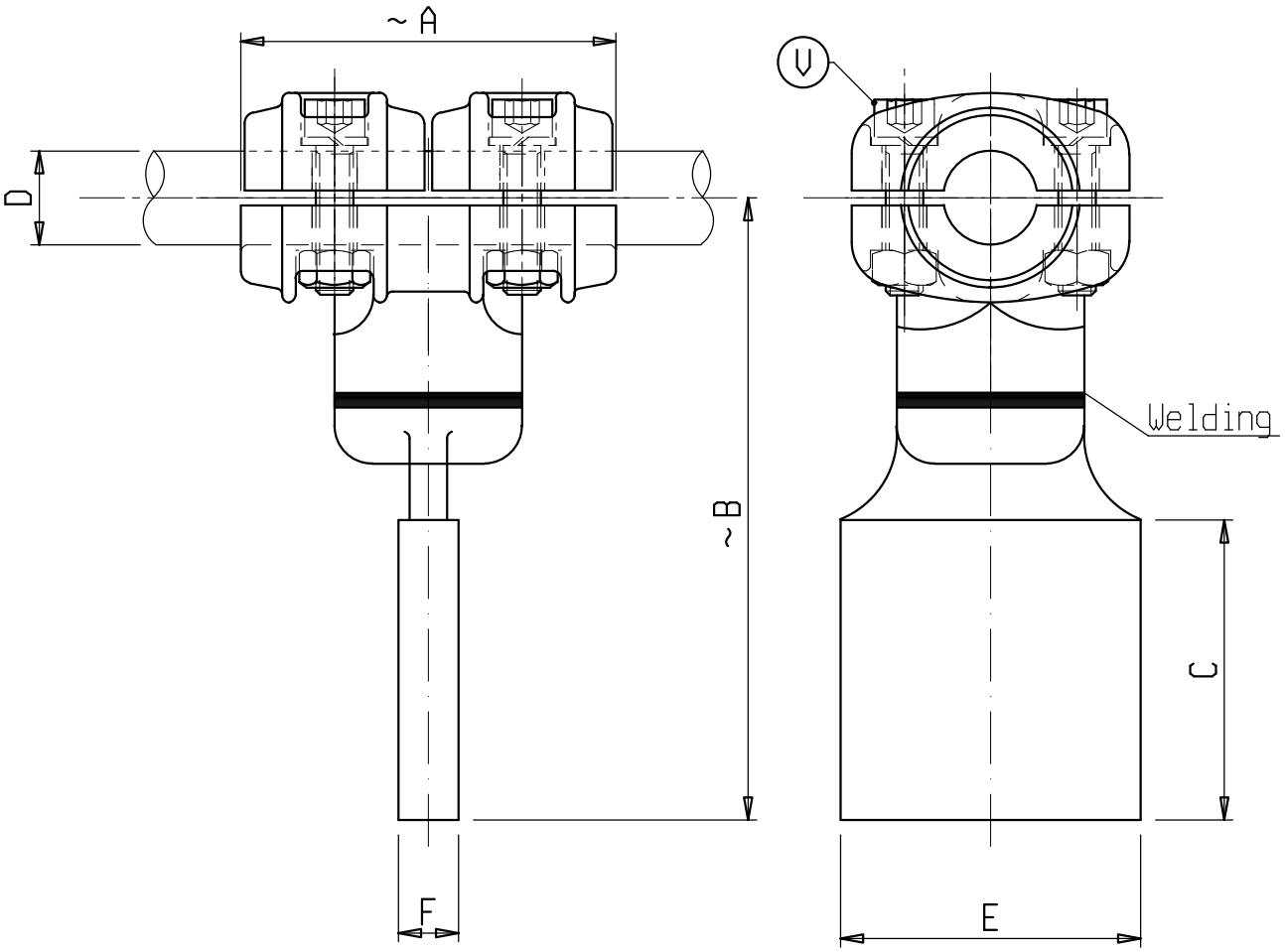

Material: Aluminium alloy
Bolts: Stainless steel

X	ø COND. D	A	B	C	E	F	V	X	ø COND. D	A	B	C	E	F	V
C0535AA90	12-20	100	165	80	80	15	M10	C6546AA90	32-36	100	170	80	80	15	M10
C0543AA90	12-20	100	185	100	100	15	M10	C0553AA90	32-36	100	190	100	100	15	M10
C0545AA90	20-25	100	165	80	80	15	M10	C0554AA90	36-40	100	175	80	80	15	M10
C0550AA90	20-25	100	185	100	100	15	M10	C0555AA90	36-40	100	195	100	100	15	M10
C0552AA90	25-32	100	165	80	50	15	M10	C6053AA90	36-40	100	245	100	150	20	M10
C0551AA90	25-32	100	165	80	80	15	M10								
C6775AA90	25-32	100	185	100	100	15	M10								

s.r.l. GORLA
MORSETTERIE
MILANO

TECHNICAL OFFICE

STRAIGHT AND T CONNECTOR
FOR Al CONDUCTOR RUN AND Al FLAT TAP

DRG. N. 66/AA/X

Rev.1 dated 18.10.17

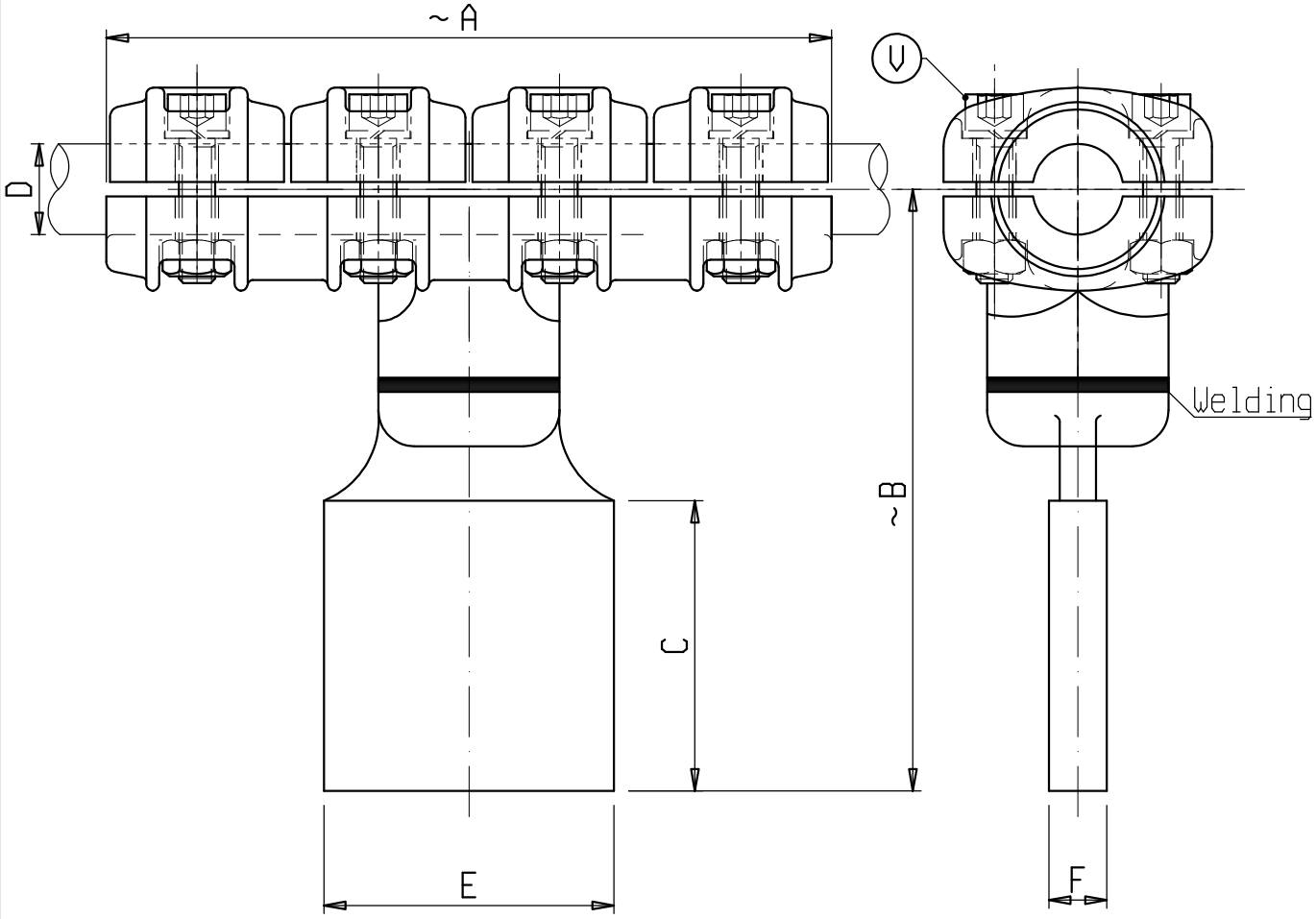

Material: Aluminium alloy
Bolts: Stainless steel

X	ø COND. D	A	B	C	E	F	V	X	ø COND. D	A	B	C	E	F	V
C 1339AA	32-36	200	185	100	100	20	M10								
C 1527AA	36-40	200	165	80	80	15	M10								