s.r.l. GORLA MORSETTERIE MILANO TECHNICAL OFFICE	PARALLEL GROOVE CLAMP WITH 2 BOLTS FOR STEEL GROUND WIRES	DRG. N. 09/LR/X SCALE .
		DRAWN . / DATE .
		APPROVED . / DATE .

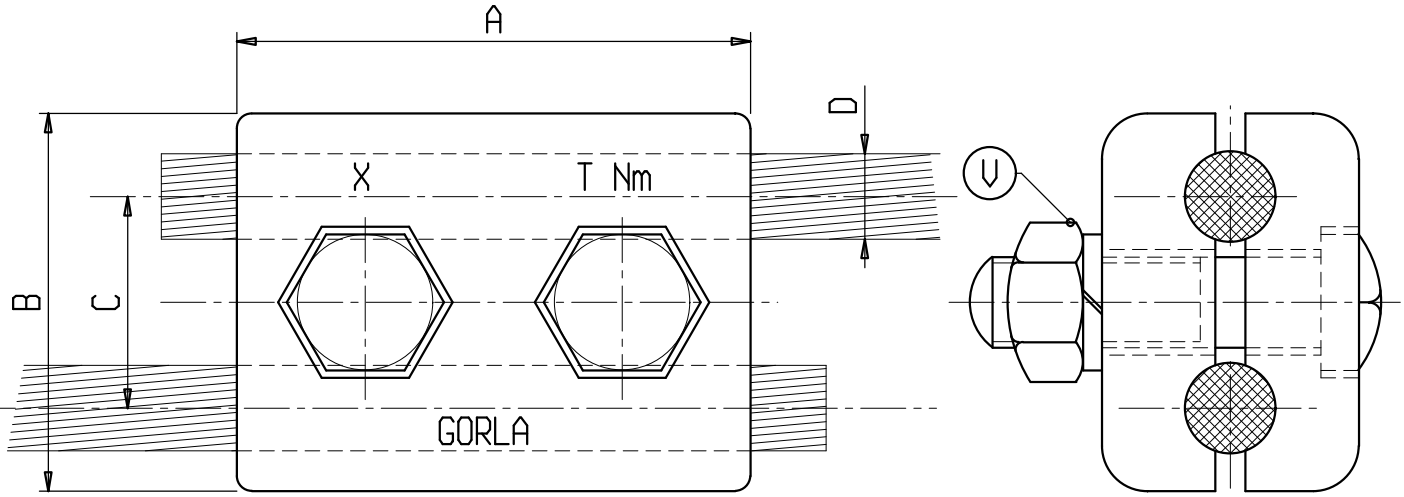

Material: Hot dip galvanized steel

Bolts: Stainless steel

X	ø COND. D	A	B	C	T	V	X	ø COND.	A	B	C	T	V
LR 6588	9 - 11,5	68	50	28	45	M12							