s.r.l. GORLA
MORSETTERIE
MILANO

TECHNICAL OFFICE

STRAIN SHACKLES

DRG. N. AT11/X

Rev. 1 dated 27.02.14

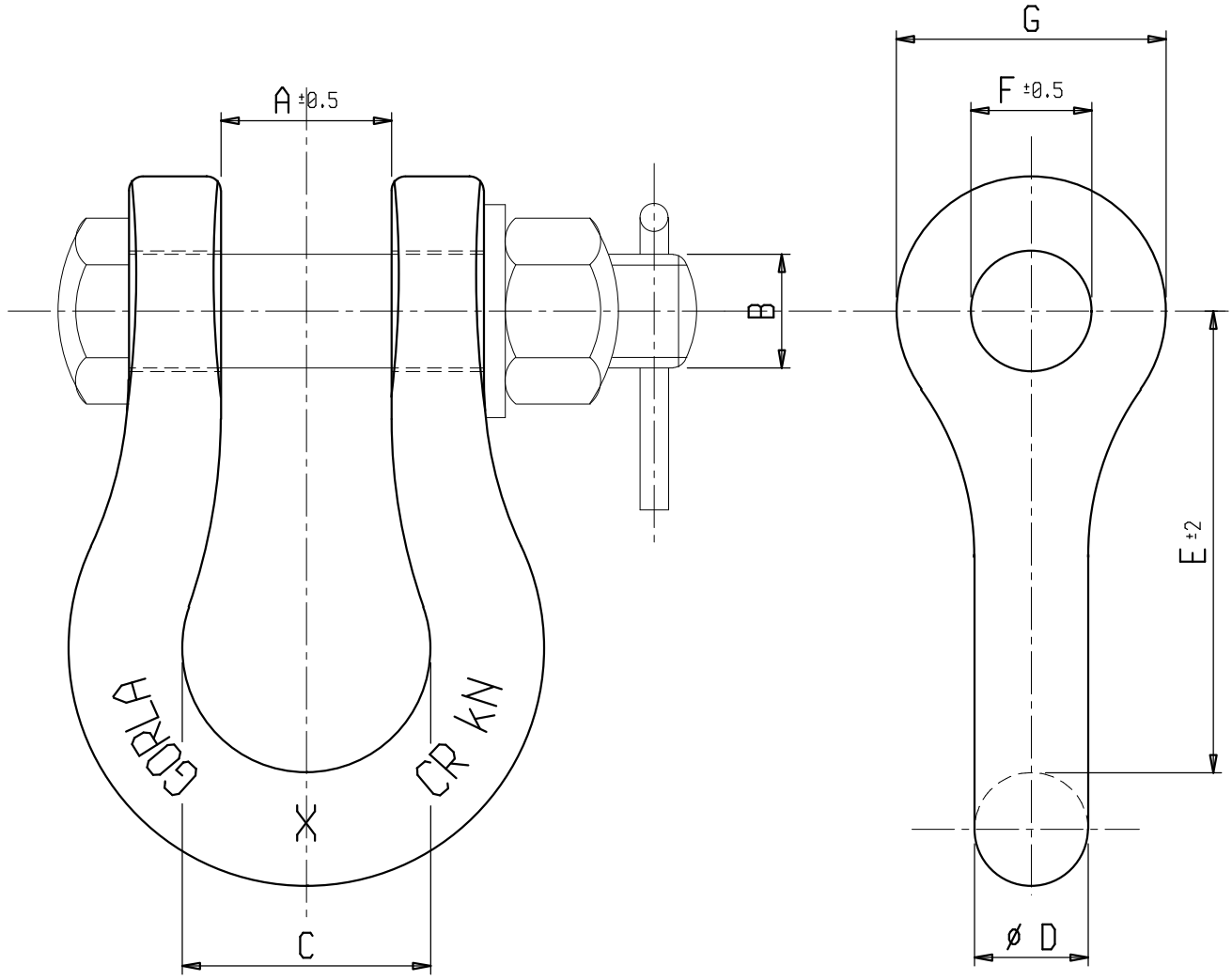

Material: Hot dip galvanized steel. Stainless steel pin

X	A	B	C	D	E	F	G	CR [kN]
LS 1805	24	M 16	35	16	65	17,5	45	120
LS 0632 M18	24	M 18	33	18	65	20	45	165
LS 0632	24	M 20	33	18	65	21,5	45	210
LS 0633	24	M 27	34	25	100	28,5	55	360
LS 0567	32	M 27	44	25	100	28,5	55	360
LS 0558	32	M 36	54	40	140	38,5	64	540