s.r.l. GORLA MORSETTERIE MILANO TECHNICAL OFFICE	BILATERAL SUPPORT FOR GROUND WIRE	DRG. N. AT32/X SCALE . DRAWN . / DATE . APPROVED . / DATE .

N.	DATE	UPDATES	DRAWN	APPROVED
.	.	.	.	.

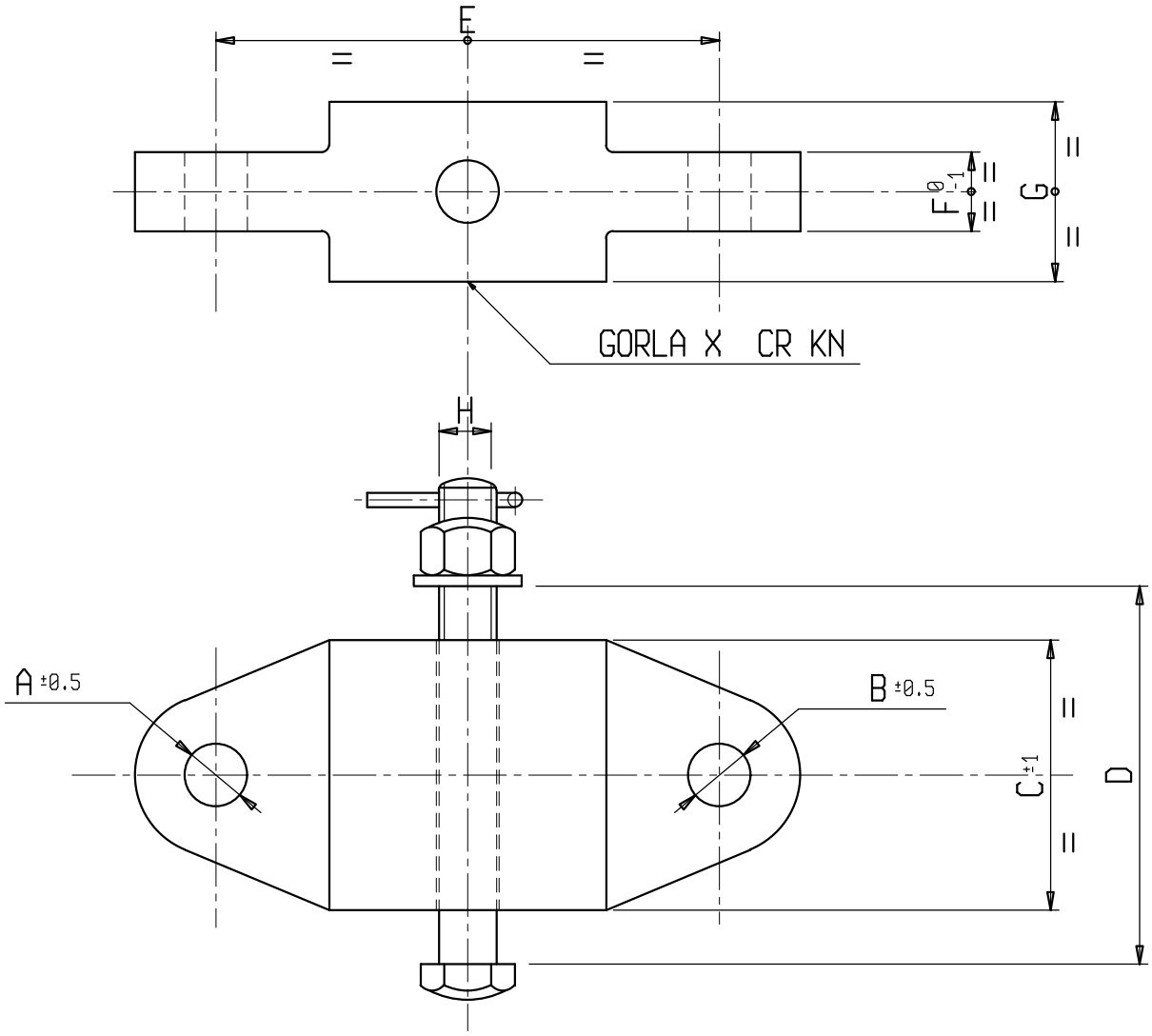

Material: Hot dip galvanized steel. Stainless steel pin.

X	A	B	C	D	E	F	G	H	CR [kN]
LS65971	17.5	17.5	75	98	140	22	50	M16	120
LS65972	17.5	21.5	75	98	140	22	50	M16	120
LS65973	21.5	21.5	75	98	140	22	50	M16	210
LS01241	17.5	17.5	96	120	140	22	50	M16	120
LS01242	17.5	21.5	96	120	140	22	50	M16	120
LS01243	21.5	21.5	96	120	140	22	50	M16	210